ISO 17025 LABORATORY
TESTING CERT # 2937.01

*Hawaii Department of Transportation*
*Research Contract No. 68212*
*Research Project No. STP-1500(092)R – Phase IV*

# CRASH TESTING AND EVALUATION OF THE HDOT 34-IN. TALL AESTHETIC CONCRETE BRIDGE RAIL WITH PEDESTRIAN HANDRAIL

Submitted by


Cody S. Stolle, Ph.D.
Research Assistant Professor

Robert W. Bielenberg, M.S.M.E.
Research Engineer

Ronald K. Faller, Ph.D., P.E.
Director and Research Full Professor

James C. Holloway, M.S.C.E.
Research Engineer & Assistant Director – Physical Testing Division

**MIDWEST ROADSIDE SAFETY FACILITY**
Nebraska Transportation Center
University of Nebraska-Lincoln

**Main Office**
Prem S. Paul Research Center at Whittier School
Room 130, 2200 Vine Street
Lincoln, Nebraska 68583-0853
(402) 472-0965

**Outdoor Test Site**
4630 N.W. 36th Street
Lincoln, Nebraska 68524


Submitted to

**HAWAII DEPARTMENT OF TRANSPORTATION**
Aliiaimoku Building
869 Punchbowl St.
Honolulu, Hawaii 96813


MwRSF Research Report No. TRP-03-466-22

August 26, 2022

# TECHNICAL REPORT DOCUMENTATION PAGE

| | | |
|---|---|---|
| **1. Report No.**<br>TRP-03-466-22 | **2. Government Accession No.** | **3. Recipient's Catalog No.** |
| **4. Title and Subtitle**<br>Crash Testing and Evaluation of the HDOT 34-in. Tall Aesthetic Concrete Bridge Rail with Pedestrian Handrail | | **5. Report Date**<br>August 26, 2022<br>**6. Performing Organization Code** |
| **7. Author(s)**<br>Stolle, C.S., Bielenberg, R.W., Faller, R.K., and Holloway, J.C. | | **8. Performing Organization Report No.**<br>TRP-03-466-22 |
| **9. Performing Organization Name and Address**<br>Midwest Roadside Safety Facility (MwRSF)<br>Nebraska Transportation Center<br>University of Nebraska-Lincoln<br>Main Office:<br>Prem S. Paul Research Center at Whittier School<br>Room 130, 2200 Vine Street<br>Lincoln, Nebraska 68583-0853<br>Outdoor Test Site:<br>4630 N.W. 36th Street<br>Lincoln, Nebraska 68524 | | **10. Work Unit No.**<br>**11. Contract**<br>Research Contract No. 68212<br>Research Project No. STP-1500(092)R – Phase IV |
| **12. Sponsoring Agency Name and Address**<br>Hawaii Department of Transportation<br>Aliiaimoku Building<br>869 Punchbowl St.<br>Honolulu, Hawaii 96813 | | **13. Type of Report and Period Covered**<br>Final Report: 2021-2022<br>**14. Sponsoring Agency Code** |
| **15. Supplementary Notes**<br>Prepared in cooperation with U.S. Department of Transportation, Federal Highway Administration. | | |


**16. Abstract**

This report documents one full-scale crash test conducted in support of a study to investigate the safety performance of the Hawaii Department of Transportation's 34-in. tall aesthetic concrete bridge rail with pedestrian handrail system. The barrier system consisted of two 11-ft long concrete rails and three 22-ft long concrete rails anchored to the concrete tarmac. The expansion joint consisted of 24-in. long, No. 8 ASTM A615 Grade 60 steel bars that were casted into the concrete and inserted into PVC pipes on the upstream side of the expansion joint. Joint sealant expansive material was placed between consecutive joints. A handrail system consisting of welded HSS3x3x¼ tubes supported by 2½x2½x¼ posts welded to baseplates was fastened to the back side of the parapet with ⅝-in. threaded rods that were post-epoxied into the parapet back surface, such that the top height of the handrail was positioned at 42 in.

Test no. HP34-1 was conducted according to the *Manual for Assessing Safety Hardware 2016* (MASH 2016) safety performance criteria using Test Level 3 (TL-3) test designation no. 3-11. In test no. HP34-1, a 2270P vehicle impacted the bridge rail at a speed of 62.2 mph and at an angle of 24.9 degrees. Test no. HP34-1 resulted in the vehicle being safely contained and redirected without violating any evaluation criteria. Therefore, test no. HP34-1 successfully met the TL-3 safety performance criteria defined in MASH 2016. The 1100C small crash test was deemed unnecessary due to prior successful testing on an identical bridge rail without the handrail and no risk of vehicle contact with the handrail.


| | | | |
|---|---|---|---|
| **17. Key Words**<br>Highway Safety, Crash Test, Roadside Appurtenances, Compliance Test, MASH 2016, Aesthetic, Bridge Rail, Concrete Parapet, Pedestrian Handrail, Combination Rail, Handrail | | **18. Distribution Statement**<br>No restrictions. This document is available through the National Technical Information Service.<br>5285 Port Royal Road, Springfield, VA 22161 | |
| **19. Security Classification (of this report)**<br>Unclassified | **20. Security Classification (of this page)**<br>Unclassified | **21. No. of Pages**<br>106 | **22. Price** |

**Form DOT F 1700.7 (8-72)** Reproduction of completed page authorized

## DISCLAIMER STATEMENT

This material is based upon work supported by the Hawaii Department of Transportation under. The contents of this report reflect the views and opinions of the authors who are responsible for the facts and the accuracy of the data presented herein. The contents do not necessarily reflect the official views or policies of the University of Nebraska-Lincoln, Hawaii Department of Transportation nor the Federal Highway Administration, U.S. Department of Transportation. This report does not constitute a standard, specification, or regulation. Trade or manufacturers' names, which may appear in this report, are cited only because they are considered essential to the objectives of the report. The United States (U.S.) government and the states of Nebraska and Hawaii do not endorse products or manufacturers.

## UNCERTAINTY OF MEASUREMENT STATEMENT

The Midwest Roadside Safety Facility (MwRSF) has determined the uncertainty of measurements for several parameters involved in standard full-scale crash testing and non-standard testing of roadside safety features. Information regarding the uncertainty of measurements for critical parameters is available upon request by the sponsor and the Federal Highway Administration.

## INDEPENDENT APPROVING AUTHORITY

The Independent Approving Authority (IAA) for the data contained herein was Mr. Scott Rosenbaugh, Research Engineer.

## ACKNOWLEDGEMENTS

The authors wish to acknowledge several sources that made a contribution to this project: (1) Hawaii Department of Transportation for sponsoring this project; and (2) MwRSF personnel for constructing the barriers and conducting the crash test.

Acknowledgement is also given to the following individuals who made a contribution to the completion of this research project.

**Midwest Roadside Safety Facility**
K.A. Lechtenberg, M.S.M.E., Research Engineer
S.K. Rosenbaugh, M.S.C.E., Research Engineer
J.S. Steelman, Ph.D., P.E., Associate Professor
M. Asadollahi Pajouh, Ph.D., P.E., Research Assistant Professor
B.J. Perry, M.E.M.E., Research Engineer
A.T. Russell, B.S.B.A., Testing and Maintenance Technician II
E.W. Krier, B.S., Engineering Testing Technician II
S.M. Tighe, Engineering Testing Technician I
D.S. Charroin, Engineering Testing Technician II
R.M. Novak, Engineering Testing Technician II
T.C. Donahoo, Engineering Testing Technician I
J.T. Jones, Engineering Testing Technician I
E.L. Urbank, B.A., Research Communication Specialist
Z.Z. Jabr, Engineering Technician
Undergraduate and Graduate Research Assistants

**Hawaii Department of Transportation**
James Fu, P.E., State Bridge Engineer
Dean Takiguchi, P.E., Bridge Design Engineer
Kimberly Okamura, Bridge Design Engineer

# SI* (MODERN METRIC) CONVERSION FACTORS

## APPROXIMATE CONVERSIONS TO SI UNITS

| Symbol | When You Know | Multiply By | To Find | Symbol |
|---|---|---|---|---|
| | | **LENGTH** | | |
| in. | inches | 25.4 | millimeters | mm |
| ft | feet | 0.305 | meters | m |
| yd | yards | 0.914 | meters | m |
| mi | miles | 1.61 | kilometers | km |
| | | **AREA** | | |
| $in^2$ | square inches | 645.2 | square millimeters | $mm^2$ |
| $ft^2$ | square feet | 0.093 | square meters | $m^2$ |
| $yd^2$ | square yard | 0.836 | square meters | $m^2$ |
| ac | acres | 0.405 | hectares | ha |
| $mi^2$ | square miles | 2.59 | square kilometers | $km^2$ |
| | | **VOLUME** | | |
| fl oz | fluid ounces | 29.57 | milliliters | mL |
| gal | gallons | 3.785 | liters | L |
| $ft^3$ | cubic feet | 0.028 | cubic meters | $m^3$ |
| $yd^3$ | cubic yards | 0.765 | cubic meters | $m^3$ |
| | | NOTE: volumes greater than 1,000 L shall be shown in $m^3$ | | |
| | | **MASS** | | |
| oz | ounces | 28.35 | grams | g |
| lb | pounds | 0.454 | kilograms | kg |
| T | short ton (2,000 lb) | 0.907 | megagrams (or “metric ton”) | Mg (or "t") |
| | | **TEMPERATURE (exact degrees)** | | |
| °F | Fahrenheit | 5(F-32)/9 or (F-32)/1.8 | Celsius | °C |
| | | **ILLUMINATION** | | |
| fc | foot-candles | 10.76 | lux | lx |
| fl | foot-Lamberts | 3.426 | candela per square meter | $cd/m^2$ |
| | | **FORCE & PRESSURE or STRESS** | | |
| lbf | poundforce | 4.45 | newtons | N |
| $lbf/in^2$ | poundforce per square inch | 6.89 | kilopascals | kPa |

## APPROXIMATE CONVERSIONS FROM SI UNITS

| Symbol | When You Know | Multiply By | To Find | Symbol |
|---|---|---|---|---|
| | | **LENGTH** | | |
| mm | millimeters | 0.039 | inches | in. |
| m | meters | 3.28 | feet | ft |
| m | meters | 1.09 | yards | yd |
| km | kilometers | 0.621 | miles | mi |
| | | **AREA** | | |
| $mm^2$ | square millimeters | 0.0016 | square inches | $in^2$ |
| $m^2$ | square meters | 10.764 | square feet | $ft^2$ |
| $m^2$ | square meters | 1.195 | square yard | $yd^2$ |
| ha | hectares | 2.47 | acres | ac |
| $km^2$ | square kilometers | 0.386 | square miles | $mi^2$ |
| | | **VOLUME** | | |
| mL | milliliter | 0.034 | fluid ounces | fl oz |
| L | liters | 0.264 | gallons | gal |
| $m^3$ | cubic meters | 35.314 | cubic feet | $ft^3$ |
| $m^3$ | cubic meters | 1.307 | cubic yards | $yd^3$ |
| | | **MASS** | | |
| g | grams | 0.035 | ounces | oz |
| kg | kilograms | 2.202 | pounds | lb |
| Mg (or "t") | megagrams (or “metric ton”) | 1.103 | short ton (2,000 lb) | T |
| | | **TEMPERATURE (exact degrees)** | | |
| °C | Celsius | 1.8C+32 | Fahrenheit | °F |
| | | **ILLUMINATION** | | |
| lx | lux | 0.0929 | foot-candles | fc |
| $cd/m^2$ | candela per square meter | 0.2919 | foot-Lamberts | fl |
| | | **FORCE & PRESSURE or STRESS** | | |
| N | newtons | 0.225 | poundforce | lbf |
| kPa | kilopascals | 0.145 | poundforce per square inch | $lbf/in^2$ |

*SI is the symbol for the International System of Units. Appropriate rounding should be made to comply with Section 4 of ASTM E380.

# TABLE OF CONTENTS

TECHNICAL REPORT DOCUMENTATION PAGE ..... i

DISCLAIMER STATEMENT ..... ii

UNCERTAINTY OF MEASUREMENT STATEMENT ..... ii

INDEPENDENT APPROVING AUTHORITY ..... ii

ACKNOWLEDGEMENTS ..... ii

SI* (MODERN METRIC) CONVERSION FACTORS ..... iii

TABLE OF CONTENTS ..... iv

LIST OF FIGURES ..... vi

LIST OF TABLES ..... ix

1 INTRODUCTION ..... 1
- 1.1 Background ..... 1
- 1.2 Objective ..... 1
- 1.3 Scope ..... 2

2 TEST REQUIREMENTS AND EVALUATION CRITERIA ..... 3
- 2.1 Test Requirements ..... 3
- 2.2 Evaluation Criteria ..... 6

3 DESIGN DETAILS ..... 8

4 TEST CONDITIONS ..... 29
- 4.1 Test Facility ..... 29
- 4.2 Vehicle Tow and Guidance System ..... 29
- 4.3 Test Vehicle ..... 29
- 4.4 Simulated Occupant ..... 33
- 4.5 Data Acquisition Systems ..... 34
  - 4.5.1 Accelerometers and Rate Transducers ..... 34
  - 4.5.2 Retroreflective Optic Speed Trap ..... 34
  - 4.5.3 Digital Photography ..... 34

5 FULL-SCALE CRASH TEST NO. HP34-1 ..... 36
- 5.1 Weather Conditions ..... 36
- 5.2 Test Description ..... 36
- 5.3 Barrier Damage ..... 46
- 5.4 Vehicle Damage ..... 51
- 5.5 Occupant Risk ..... 57
- 5.6 Barrier Loads ..... 57
- 5.7 Discussion ..... 58

6 SUMMARY AND CONCLUSIONS ..... 60

7 MASH IMPLEMENTATION ..... 62

8 REFERENCES ..... 63

9 APPENDICES ..... 64
Appendix A. Material Specifications ..... 65
Appendix B. Vehicle Center of Gravity Determination ..... 88
Appendix C. Vehicle Deformation Records ..... 90
Appendix D. Accelerometer and Rate Transducer Data Plots, Test No. HP34-1 ..... 97

# LIST OF FIGURES

Figure 1. Maximum Working Width Obtained during Test No. H34BR-2 [1] ....4
Figure 2. Vehicle Engagement with Handrail during Test No. HP34S-1 [3] ....4
Figure 3. Pedestrian Handrail Damage from Impact with Hood and Fender, Test No. HP34S-1 [3] ....5
Figure 4. Test Installation Layout, Test No. HP34-1 ....10
Figure 5. Section Details, Test No. HP34-1 ....11
Figure 6. Reinforcement and Expansion Joint Detail, Test No. HP34-1 ....12
Figure 7. Reinforcement and Expansion Joint Details, Test No. HP34-1 ....13
Figure 8. 11-ft Concrete Parapet Details, Test No. HP34-1 ....14
Figure 9. 22-ft Concrete Parapet Details, Test No. HP34-1 ....15
Figure 10. Rebar Details, Test Nos. Test No. HP34-1 ....16
Figure 11. Expansion Joint Components, Test No. HP34-1 ....17
Figure 12. Pedestrian Handrail Assembly, Test No. HP34-1 ....18
Figure 13. Pedestrian Handrail Details, Test No. HP34-1 ....19
Figure 14. Baseplate, Post, and Handrail Connection Details for Pedestrian Rail, Test No. HP34-1 ....20
Figure 15. Pedestrian Handrail Component Details, Test No. HP34-1 ....21
Figure 16. Pedestrian Handrail-to-Parapet Fastener Details, Test No. HP34-1 ....22
Figure 17. Bill of Materials, Test No. HP34-1 ....23
Figure 18. Construction Process Photographs, Test No. HP34-1 ....24
Figure 19. Construction Process Photographs, Test No. HP34-1 ....25
Figure 20. Final Shape of Premolded Joint Sealer Between Concrete Parapet Sections ....26
Figure 21. Test Installation, Test No. HP34-1 ....27
Figure 22. Test Installation, Test No. HP34-1 ....28
Figure 23. Test Vehicle, Test No. HP34-1 ....30
Figure 24. Test Vehicle's Interior Floorboards and Undercarriage ....31
Figure 25. Vehicle Dimensions, Test No. HP34-1 ....32
Figure 26. Target Geometry, Test No. HP34-1 ....33
Figure 27. Camera Locations, Speeds, and Lens Settings, Test No. HP34-1 ....35
Figure 28. Impact Location, Test No. HP34-1 ....38
Figure 29. Sequential Photographs, Test No. HP34-1 ....39
Figure 30. Sequential Photographs, Test No. HP34-1 ....40
Figure 31. Documentary Photographs, Test No. HP34-1 ....41
Figure 32. Documentary Photographs, Test No. HP34-1 ....42
Figure 33. Documentary Photographs, Test No. HP34-1 ....43
Figure 34. Documentary Photographs, Test No. HP34-1 ....44
Figure 35. Vehicle Final Position and Trajectory Marks, Test No. HP34-1 ....45
Figure 36. System Damage, Test No. HP34-1 ....47
Figure 37. System Damage, Test No. HP34-1 ....48
Figure 38. Cracking and Barrier Damage at Expansion Joint No. 2, Test No. HP34-1 ....49
Figure 39. Barrier Top Surface Damage and Post No. 7 Contact, Test No. HP34-1 ....50
Figure 40. Permanent Set Deflection, Dynamic Deflection, and Working Width, Test No. HP34-1 ....51
Figure 41. Vehicle Damage, Test No. HP34-1 ....53
Figure 42. Vehicle Damage, Test No. HP34-1 ....54

Figure 43. Vehicle Interior Damage, Test No. HP34-1 .....55
Figure 44. Vehicle Undercarriage Damage, Test No. HP34-1 .....56
Figure 45. Perpendicular and Tangential Forces Imparted to the Barrier System (SLICE-2, Primary) Located at c.g., Test No. HP34-1.....58
Figure 46. Summary of Test Results and Sequential Photographs, Test No. HP34-1.....59
Figure 47. HDOT Thrie Beam Approach Guardrail Transition [10].....62
Figure A-1. Concrete, Test No. HP34-1 (Item No. a1).....68
Figure A-2. 21-Day Concrete Material Strength, Test No. HP34-1 (Item No. a1) .....69
Figure A-3. #5 Rebar, Test No. HP34-1 (Item No. b1 through b4).....70
Figure A-4. #8 Smooth Rebar, Test No. HP34-1 (Item No. c1) .....71
Figure A-5. PVC Tube Specifications, Test No. HP34-1 (Item No. c2 and c3).....72
Figure A-6. Epoxy Specifications, Test No. HP34-1 (Item No. c4).....73
Figure A-7. Fiber Expansion Joint Filler, Test No. HP34-1 (Item No. c5) .....74
Figure A-8. Expansion Joint Sealant, Test No. HP34-1 (Item No. c6).....75
Figure A-9. ¾-in. Base Plate, Test No. HP34-1 (Item No. d1).....76
Figure A-10. HSS2½x2½x¼, 13¾-in. Pedestrian Handrail Post, Test No. HP34-1 (Item No. d2) .....77
Figure A-11. HSS3x3x¼, 131½-in. Pedestrian Handrail, Test No. HP34-1 (Item Nos. d3 and d4) .....78
Figure A-12. HSS2x2x¼, 7-in. Pedestrian Handrail Splice Tube, Test No. HP34-1 (Item No. d5) .....79
Figure A-13. ¼-in. Steel Plate, Pedestrian Handrail End Cap Specifications, Test No. HP34-1 (Item No. d6) .....80
Figure A-14. ⅝-in.-11 UNC, 7⅞-in. Threaded Rod, Test No. HP34-1 (Item No. d7) .....81
Figure A-15. ⅝-in.-11 UNC, 7⅞-in. Threaded Rod, Cont., Test No. HP34-1 (Item No. d7).....82
Figure A-16. 3/16-in. Pedestrian Handrail Shim Plate, Test No. HP34-1 (Item No. d8).....83
Figure A-17. ⅝"-11 UNC Heavy Hex Nut, Test No. HP34-1 (Item No. e1) .....84
Figure A-18. ⅝"-11 UNC Heavy Hex Nut, Cont., Test No. HP34-1 (Item No. e1).....85
Figure A-19. ⅝-in. Washer, Test No. HP34-1 (Item No. e2) .....86
Figure A-20. ⅝-in. Washer, Test No. HP34-1 (Item No. e2) .....87
Figure B-1. Vehicle Mass Distribution, Test No. HP34-1.....89
Figure C-1. Floor Pan Deformation Data – Set 1, Test No. HP34-1 .....91
Figure C-2. Floor Pan Deformation Data – Set 2, Test No. HP34-1 .....92
Figure C-3. Occupant Compartment Deformation Data – Set 1, Test No. HP34-1 .....93
Figure C-4. Occupant Compartment Deformation Data – Set 2, Test No. HP34-1 .....94
Figure C-5. Exterior Vehicle Crush (NASS) - Front, Test No. HP34-1.....95
Figure C-6. Exterior Vehicle Crush (NASS) - Side, Test No. HP34-1 .....96
Figure D-1. 10-ms Average Longitudinal Deceleration (SLICE-2, Primary), Test No. HP34-1 .....98
Figure D-2. Longitudinal Occupant Impact Velocity (SLICE-2, Primary), Test No. HP34-1.....98
Figure D-3. Longitudinal Occupant Displacement (SLICE-2, Primary), Test No. HP34-1.....99
Figure D-4. 10-ms Average Lateral Deceleration (SLICE-2, Primary), Test No. HP34-1 .....99
Figure D-5. Lateral Occupant Impact Velocity (SLICE-2, Primary), Test No. HP34-1 .....100
Figure D-6. Lateral Occupant Displacement (SLICE-2, Primary), Test No. HP34-1 .....100
Figure D-7. Vehicle Angular Displacements (SLICE-2, Primary), Test No. HP34-1.....101
Figure D-8. Acceleration Severity Index (SLICE-2, Primary), Test No. HP34-1.....101
Figure D-9. 10-ms Average Longitudinal Deceleration (SLICE-1), Test No. HP34-1.....102

Figure D-10. Longitudinal Occupant Impact Velocity (SLICE-1), Test No. HP34-1.....102
Figure D-11. Longitudinal Occupant Displacement (SLICE-1), Test No. HP34-1.....103
Figure D-12. 10-ms Average Lateral Deceleration (SLICE-1), Test No. HP34-1 .....103
Figure D-13. Lateral Occupant Impact Velocity (SLICE-1), Test No. HP34-1 .....104
Figure D-14. Lateral Occupant Displacement (SLICE-1), Test No. HP34-1 .....104
Figure D-15. Vehicle Angular Displacements (SLICE-1), Test No. HP34-1 .....105
Figure D-16. Acceleration Severity Index (SLICE-1), Test No. HP34-1.....105

# LIST OF TABLES

Table 1. MASH 2016 TL-3 Crash Test Conditions for Longitudinal Barriers.....3
Table 2. MASH 2016 Evaluation Criteria for Longitudinal Barrier.....7
Table 3. Weather Conditions, Test No. HP34-1 .....36
Table 4. Sequential Description of Impact Events, Test No. HP34-1 .....37
Table 5. Maximum Occupant Compartment Deformations by Location .....52
Table 6. Summary of OIV, ORA, THIV, PHD, and ASI Values, Test No. HP34-1.....57
Table 7. Summary of Safety Performance Evaluation.....61
Table A-1. Bill of Materials, Test No. HP34-1.....66

# 1 INTRODUCTION

## 1.1 Background

The Hawaii Department of Transportation (HDOT) utilizes several concrete bridge rails with aesthetic treatments. However, the crashworthiness of these bridge railings under current impact safety standards has not been demonstrated until recently. This report documents one full-scale crash test conducted in support of a study to evaluate the safety performance of HDOT's 34-in. tall, Aesthetic Concrete Bridge Rail with aesthetic recessed rectangular panels added to its traffic-side and back-side surfaces. The recessed rectangular panels for the HDOT 34-in. tall bridge rail were 60 in. wide, 15 in. tall, and ½ in. deep. The edges of the panels transitioned to the face of the rail using 2H:1V slope. The concrete bridge rail was anchored to a concrete bridge deck, and a 2-in. thick concrete or asphalt finishing surface was simulated on the traffic-side face of the bridge rail with the use of recessing the bridge rail into the existing concrete tarmac. Expansion joints using smooth dowels were located at intervals in the bridge rail. End sections measuring 3 ft – 6 in. long are used at the ends of the bridge rail adjacent to an end buttress structure.

This report describes the third series of evaluations of HDOT's vertical concrete parapet with aesthetic, recessed panels. Previous evaluations of HDOT's vertical parapet system are summarized below:

- H34BR-1,2 [1]: Full-scale crash testing of HDOT's 34-in. Tall Aesthetic Concrete Bridge Rail. Tests were performed according to MASH test designation nos. 3-10 and 3-11. All crashworthiness criteria were satisfied. The system received an FHWA Eligibility Letter HSST-1/B-345 dated August 14, 2020 [2].

- HP34S-1,2 [3]: Full-scale crash testing of HDOT's vertical, 34-in. Tall Aesthetic Concrete Bridge Rail with Pedestrian Handrail and Sidewalk. The sidewalk was 6 in. tall and 6 ft wide. Tests were performed according to MASH test designation nos. 3-10 and 3-11. All crashworthiness criteria were satisfied.

This report documents a full-scale crash testing of a third application for this system, which consists of the same 34-in. tall, vertical concrete parapet with aesthetic, rectangular recessed panels as was evaluated during test nos. H34BR-1 and 2, and with the same pedestrian handrail mounted to the back side of the barrier as was evaluated in test no. HP34S-1 and 2. This test series was used to investigate if vehicle components would extend into the Zone of Intrusion (ZOI) and interact with the pedestrian handrail and produce snag, which could increase occupant risk.

## 1.2 Objective

The research objective of this study included an evaluation of the safety performance of Hawaii's 34-in. Tall Aesthetic Concrete Bridge Rail with Pedestrian Handrail. The system was evaluated according to the Test Level 3 (TL-3) criteria of the *Manual for Assessing Safety Hardware, Second Edition* (MASH 2016) [4].

## 1.3 Scope

The research objective was achieved through the completion of several tasks. One full-scale crash test was conducted on the HDOT 34-in. tall, 34-in. Tall Aesthetic Concrete Bridge Rail with Pedestrian Handrail according to MASH 2016 test designation no. 3-11. Next, the full-scale vehicle crash test result was analyzed, evaluated, and documented. Conclusions and recommendations were then made pertaining to the safety performance of the HDOT 34-in. Tall Aesthetic Concrete Bridge Rail with Pedestrian Handrail. A final report was published discussing the results and findings from the full-scale crash test that was conducted on the HDOT 34-in. tall, aesthetic concrete bridge rail system with pedestrian handrail.

Note that the only difference between the system evaluated during test nos. H34BR-1 and 2 [1] and the current system reported herein was the addition of a back-mounted handrail. However, during test no. H34BR-1, the extension of the small car into the barrier's ZOI was less than the width of the barrier. Therefore, it was unlikely that adding a back-mounted handrail would affect the results of the test and the associated occupant risk. Therefore, only MASH test designation no. 3-11 with a pickup truck was performed on the HDOT 34-in. Tall, Aesthetic Concrete Bridge Rail with Pedestrian Handrail.

# 2 TEST REQUIREMENTS AND EVALUATION CRITERIA

## 2.1 Test Requirements

Aesthetic concrete bridge rails must satisfy impact safety standards in order to be declared eligible for federal reimbursement by the Federal Highway Administration (FHWA) for use on the National Highway System (NHS). For new hardware, these safety standards consist of the guidelines and procedures published in MASH 2016 [4]. According to TL-3 of MASH 2016, longitudinal barrier systems must be subjected to two full-scale vehicle crash tests, as summarized in Table 1.

Table 1. MASH 2016 TL-3 Crash Test Conditions for Longitudinal Barriers

| Test Article | Test Designation No. | Test Vehicle | Vehicle Weight, lb | Impact Conditions | | Evaluation Criteria [1] |
|---|---|---|---|---|---|---|
| | | | | Speed, mph | Angle, degrees | |
| Longitudinal Barrier | 3-10 | 1100C | 2,425 | 62 | 25 | A,D,F,H,I |
| | 3-11 | 2270P | 5,000 | 62 | 25 | A,D,F,H,I |

[1] Evaluation criteria explained in Table 2.

It should be noted that the test matrix detailed herein represents a practical worst-case condition with respect to the MASH 2016 safety requirements and a crashworthiness evaluation of the barrier system. According to MASH 2016, the HDOT 34-in. Tall, Aesthetic Concrete Bridge Rail with Pedestrian Handrail should be evaluated at a location that evaluates the greatest propensity for vehicle snag as well as a location that maximizes structural loading of the bridge rail at a critical section. However, two recent full-scale testing efforts of the 34-in. tall, Aesthetic Concrete Bridge Rail system were conducted at an expansion joint to maximize the loading and likelihood of barrier deflection to result in vehicle snag. For both systems, the deflections of parapet segments at expansion joints were minimal.

During test no. H34BR-2 (MASH test designation no. 3-11), the working width of the 34-in. Tall, Aesthetic Concrete Bridge Rail was 17 in., as shown in Figure 1. The working width was determined from the extension of the impact-side front corner of the hood extending over the top of the rail.

For the 34-in. Tall, Aesthetic Concrete Bridge Rail with Pedestrian Handrail and Sidewalk system [3], the impact-front corner of the vehicle's hood slightly engaged the longitudinal handrail. As a result, the extension of the vehicle's hood into the ZOI was limited, as shown in Figure 2.

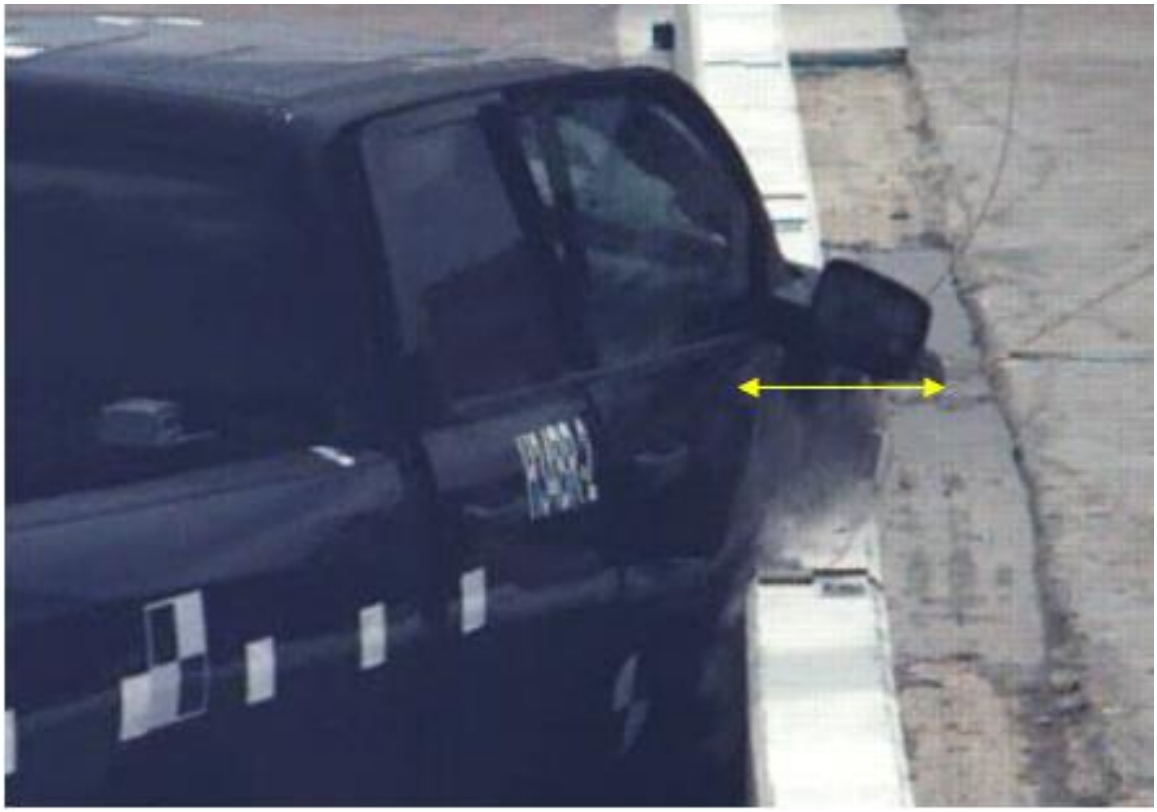

Figure 1. Maximum Working Width Obtained during Test No. H34BR-2 [1]

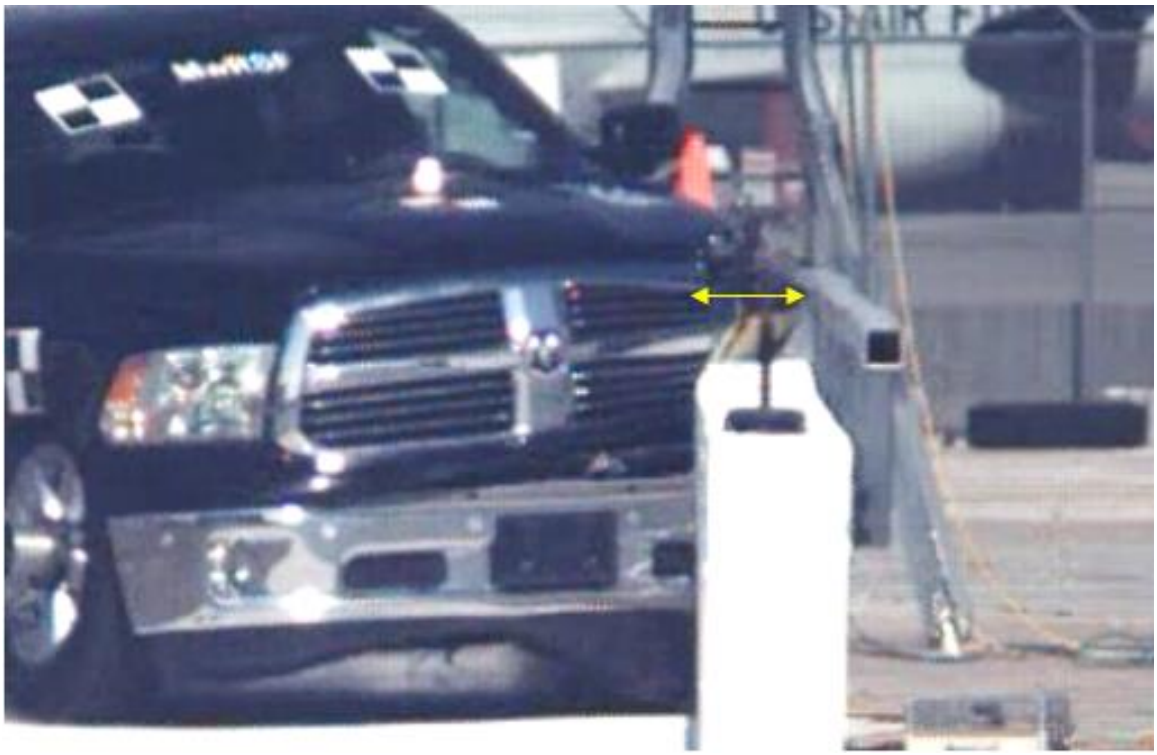

Figure 2. Vehicle Engagement with Handrail during Test No. HP34S-1 [3]

The engagement of the engine hood and fender of the pickup truck during test no. HP34S-1 resulted in some scrubbing contact against the handrail and the post, but damage was limited. Post and rail damage is shown in Figure 3. Because snagging was limited and occupant risk outcomes were deemed acceptable, the results of test no. HP34S-1 were determined to be acceptable.

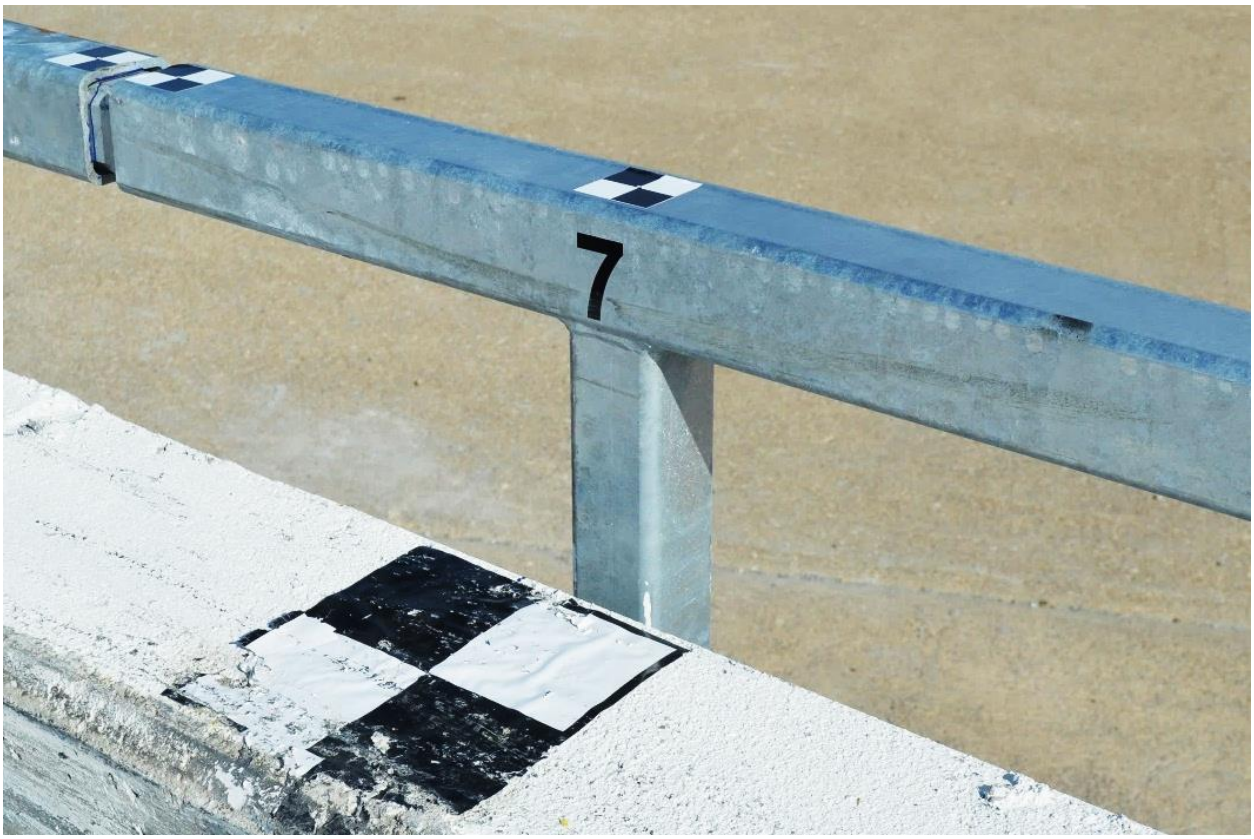


Figure 3. Pedestrian Handrail Damage from Impact with Hood and Fender, Test No. HP34S-1 [3]

Both tests utilized the critical impact point specified for test designation no. 3-11 for rigid barrier testing shown in Table 2.7 of MASH 2016. The CIP was identified upstream from the expansion joint for the evaluation of vehicle snag and structural loading of the HDOT 34-in. tall, Aesthetic Concrete Bridge Rail. For test no. HP34-1, documented herein, a CIP of 85 in. upstream from the post was selected based on the point of maximum extension of the hood and fender during test no. H34BR-1. However, the initial impact was to occur slightly downstream from the expansion joint based on the geometry of the parapet and connection to concrete parapet to maximize the extension of the fender over the top of the parapet and prevent the fender from becoming wedged into the aesthetic recesses in the front of the rail. The impact was still designed to load the expansion joint prior to encountering the post but minimize the rail deflection prior to vehicle impact with the handrail.

The 1100C passenger car test was deemed not critical for testing and evaluating this system. Note that the only difference between the system evaluated during test nos. H34BR-1 and 2 [1] and the HDOT 34-in. tall, aesthetic concrete bridge rail system with handrail was the back-

mounted handrail. During test no. H34BR-1, the extension of the small car into the barrier's ZOI was limited. The right-side mirror, which was not considered a structural member of the car, extended to a maximum lateral extent of 9.6 in., which was less than the width of the barrier. Structural components of the vehicle, including the right-front fender, "A," "B," and "C"-pillars, sill, and hood extended less than the right-side mirror. Therefore, it was deemed unlikely that adding a back-mounted pedestrian handrail 10¾ in. behind the traffic-side face would affect the system's safety performance or occupant risk measures for the 1100C small car. Therefore, only MASH test designation no. 3-11 was performed on the HDOT 34-in. Tall, Aesthetic Concrete Bridge Rail with Pedestrian Handrail.

It should be noted that the test matrix detailed herein represents the researchers' best engineering judgement with respect to the MASH 2016 safety requirements and their internal evaluation of critical tests necessary to evaluate the crashworthiness of the barrier system. However, the recent switch to new vehicle types as part of the implementation of the MASH 2016 criteria and the lack of experience and knowledge regarding the performance of the new vehicle types with certain types of hardware could result in unanticipated barrier performance. Thus, any tests within the evaluation matrix deemed non-critical may eventually need to be evaluated based on additional knowledge gained over time or revisions to the MASH 2016 criteria.

## 2.2 Evaluation Criteria

Evaluation criteria for full-scale vehicle crash testing are based on three appraisal areas: (1) structural adequacy; (2) occupant risk; and (3) vehicle trajectory after collision. Criteria for structural adequacy are intended to evaluate the ability of the bridge rail system to contain and redirect impacting vehicles. In addition, controlled lateral deflection of the test article is acceptable. Occupant risk evaluates the degree of hazard to occupants in the impacting vehicle. Post-impact vehicle trajectory is a measure of the potential of the vehicle to result in a secondary collision with other vehicles and/or fixed objects, thereby increasing the risk of injury to the occupants of the impacting vehicle and/or other vehicles. These evaluation criteria are summarized in Table 2 and defined in greater detail in MASH 2016. The full-scale vehicle crash test documented herein was conducted and reported in accordance with the procedures provided in MASH 2016.

In addition to the standard occupant risk measures, the Post-Impact Head Deceleration (PHD), the Theoretical Head Impact Velocity (THIV), and the Acceleration Severity Index (ASI) were determined and reported. Additional discussion on PHD, THIV and ASI is provided in MASH 2016.

Table 2. MASH 2016 Evaluation Criteria for Longitudinal Barrier

<table>
<tr><td>Structural Adequacy</td><td>A.</td><td colspan="3">Test article should contain and redirect the vehicle or bring the vehicle to a controlled stop; the vehicle should not penetrate, underride, or override the installation although controlled lateral deflection of the test article is acceptable.</td></tr>
<tr><td rowspan="6">Occupant Risk</td><td>D.</td><td colspan="3">Detached elements, fragments or other debris from the test article should not penetrate or show potential for penetrating the occupant compartment, or present an undue hazard to other traffic, pedestrians, or personnel in a work zone. Deformations of, or intrusions into, the occupant compartment should not exceed limits set forth in Section 5.2.2 and Appendix E of MASH 2016.</td></tr>
<tr><td>F.</td><td colspan="3">The vehicle should remain upright during and after collision. The maximum roll and pitch angles are not to exceed 75 degrees.</td></tr>
<tr><td rowspan="3">H.</td><td colspan="3">Occupant Impact Velocity (OIV) (see Appendix A, Section A5.2.2 of MASH 2016 for calculation procedure) should satisfy the following limits:</td></tr>
<tr><td colspan="3">Occupant Impact Velocity Limits</td></tr>
<tr><td>Component</td><td>Preferred</td><td>Maximum</td></tr>
<tr><td>Longitudinal and Lateral</td><td>30 ft/s</td><td>40 ft/s</td></tr>
<tr><td rowspan="3">I.</td><td colspan="3">The Occupant Ridedown Acceleration (ORA) (see Appendix A, Section A5.2.2 of MASH 2016 for calculation procedure) should satisfy the following limits:</td></tr>
<tr><td colspan="3">Occupant Ridedown Acceleration Limits</td></tr>
<tr><td>Component</td><td>Preferred</td><td>Maximum</td></tr>
<tr><td>Longitudinal and Lateral</td><td>15.0 g’s</td><td>20.49 g’s</td></tr>
</table>

# 3 DESIGN DETAILS

The test installation consisted of two 11-ft long and three 22-ft long concrete barrier segments and had a total length of 88 ft, as shown in Figures 4 through 17. Photographs of the test installation are shown in Figures 18 through 22. Material specifications, mill certifications, and certificates of conformity for the system materials are shown in Appendix A.

As noted previously, the HDOT 34-in. Tall, Aesthetic Concrete Bridge Rail with Pedestrian Handrail system was constructed for evaluation of the LON of the bridge rail. Thus, no end sections of the rail were constructed. The rail was constructed in five segments separated by four expansion joints to be consistent with previously tested rail designs [1, 3]. The spacing between the expansion joints was limited to 22 ft, which was the smallest rail segment length between joints noted by HDOT. Larger rail segment lengths between expansion joints were considered less critical. The HDOT 34-in. Tall, Aesthetic Concrete Bridge Rail with Pedestrian Handrail was installed on the concrete tarmac at the MwRSF Outdoor Test Site rather than on a simulated bridge deck and overhang. A narrow trench was cut down 2-in. into the existing concrete tarmac for which the 36-in. barrier system was anchored, thus providing a 34-in. barrier height relative to the tarmac to simulate the correct height of the rail relative to the bridge deck in the HDOT standard, which was consistent with the previously-tested rail [1]. A concrete fill was then applied to the trench surrounding the rail to simulate the 2-in. tall, finished grade. The handrail, which consisted of welded rail assemblies with posts and base plates, were installed on the back side of the parapet using four, post-installed epoxied threaded rods and nuts. The handrail segments contained built-up, welded splice tubes which were inserted into the ends of the rail to simulate expansion joints in the handrails.

The bridge rail was 34 in. tall relative to the traffic-side tarmac and 10 in. wide at the top and the bottom. The top surface had ¾-in. chamfered edges. Recessed aesthetic lines ½ in. deep were located 7 in. below the top surface and 9 in. above the bottom surface on the traffic- and back-side faces. The main aesthetic feature on this concrete bridge rail was 60-in. wide x 15-in. tall x ½-in. deep recessed panels on both the traffic-side and back-side faces. The edges of the panels transitioned to the face of the rail using 2H:1V slope. The concrete mix for the bridge rail sections required a minimum 28-day compressive strength of 4,000 psi. Two concrete cylinder compression tests were conducted, with 21-day compressive strength results of 5,490 and 5,740 psi. Steel reinforcement in the barrier consisted of ASTM A615 Grade 60 rebar. Each concrete bridge rail segment consisted of eight no. 5 longitudinal bars (four per face) that were vertically spaced 10 in. apart. Vertical stirrups were also provided using no. 5 rebar, which were spaced on 12-in. centers on the back-side face and on 6-in. centers on the traffic-side face. Vertical reinforcement bars were anchored to an existing concrete tarmac on both the traffic-side and back-side faces to a depth of 8 in. and epoxied with Hilti HIT RE-500 V3 in order to develop the full tensile strength of the bar. The minimum bond strength of the epoxy adhesive was 1,560 psi after a two-day cure.

The bridge rail system contained an expansion joint consisting of a ½-in. gap that was produced using a premolded joint sealer, as shown in Figures 6 and 7. The expansion joint assembly consisted of three 24-in. long, No. 8 smooth rebar with PVC tubes and caps casted on the upstream side of the expansion joint. Additional vertical stirrups spaced on 4-in. centers were placed at the expansion joints, as shown in Figures 6 and 7.

The handrail consisted of a welded tube, post, and baseplate assembly. The rail consisted of HSS3x3x¼ by 21-ft 11-in. long steel tubes, which were welded using a ¼-in. fillet weld all around to HSS2½x2½x¼ by 7-in. long tube posts, as shown in Figures 12 through 16. The spacing between posts was 66 in., and one post was installed 16½ in. from the upstream end of each parapet. The tube posts were welded to 8-in. x 5-in. x ¾-in. thick, ASTM A36 steel base plates with a $^{3}/_{16}$-in. fillet weld on both sides of the post. At the bottom of the post, a 2¼-in. x 2¼-in. x ¼-in. thick cap was welded to the bottom of the post with a ⅛-in. fillet weld all around. Two ¼-in. diameter, semicircular weep holes were located at the top of the post and one ½-in. diameter weep hole was located in the lower post cap to allow air to escape through the post during hot-dip galvanization. The splices consisted of HSS2x2x¼ by 7-in. long tube with 7-in. x 1½-in. x $^{3}/_{16}$-in. thick shims inserted 2 in. into the downstream side of the handrail tube and welded on all sides with a $^{3}/_{16}$-in. fillet weld. As a result, approximately 1 in. of the splice tube assembly was exposed at the expansion joint, and the remaining 4 in. of the splice tube assembly protruded into the adjacent handrail end.

The pedestrian rail was fastened to the back side of the parapet with four ⅝-in. diameter, 7⅞-in. long ASTM F1554-15 Grade 105 steel threaded rods located 4⅞ and 7⅝ in. from the top surface of the barrier, as shown in Figure 10. The top of the pedestrian handrail was located at 42½ in. above the MwRSF tarmac, which simulated a bridge deck surface, or 8½ in. above the top surface of the barrier.

During construction of the barrier system, forms were installed with the aesthetic recesses and upper bevel in the face of the barrier, as shown in Figure 18. The construction team installed the premolded joint sealer between consecutive parapet sections without additional backup structure or reinforcement. As a result, pressure from the concrete pour occasionally caused the premolded joint sealer to deform into adjacent parapet sections. The construction team adapted by partially filling concrete parapets adjacent to each other to provide intermediate bearing pressure on both sides of the premolded joint sealer. In practice, the use of premolded joint sealer may require either stepped construction on multiple parapets simultaneously, or backup structure to reinforce the premolded joint sealer.

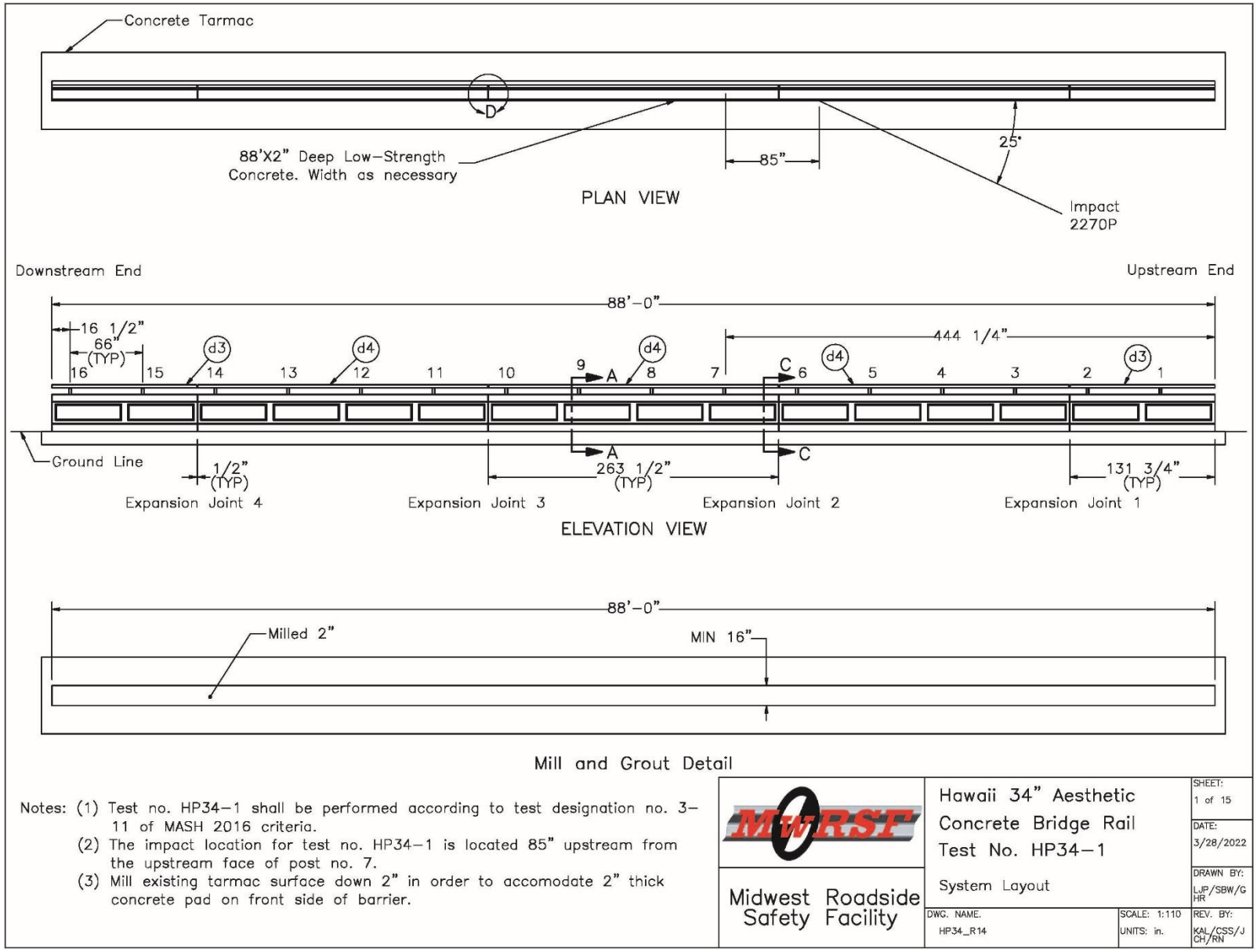


Figure 4. Test Installation Layout, Test No. HP34-1

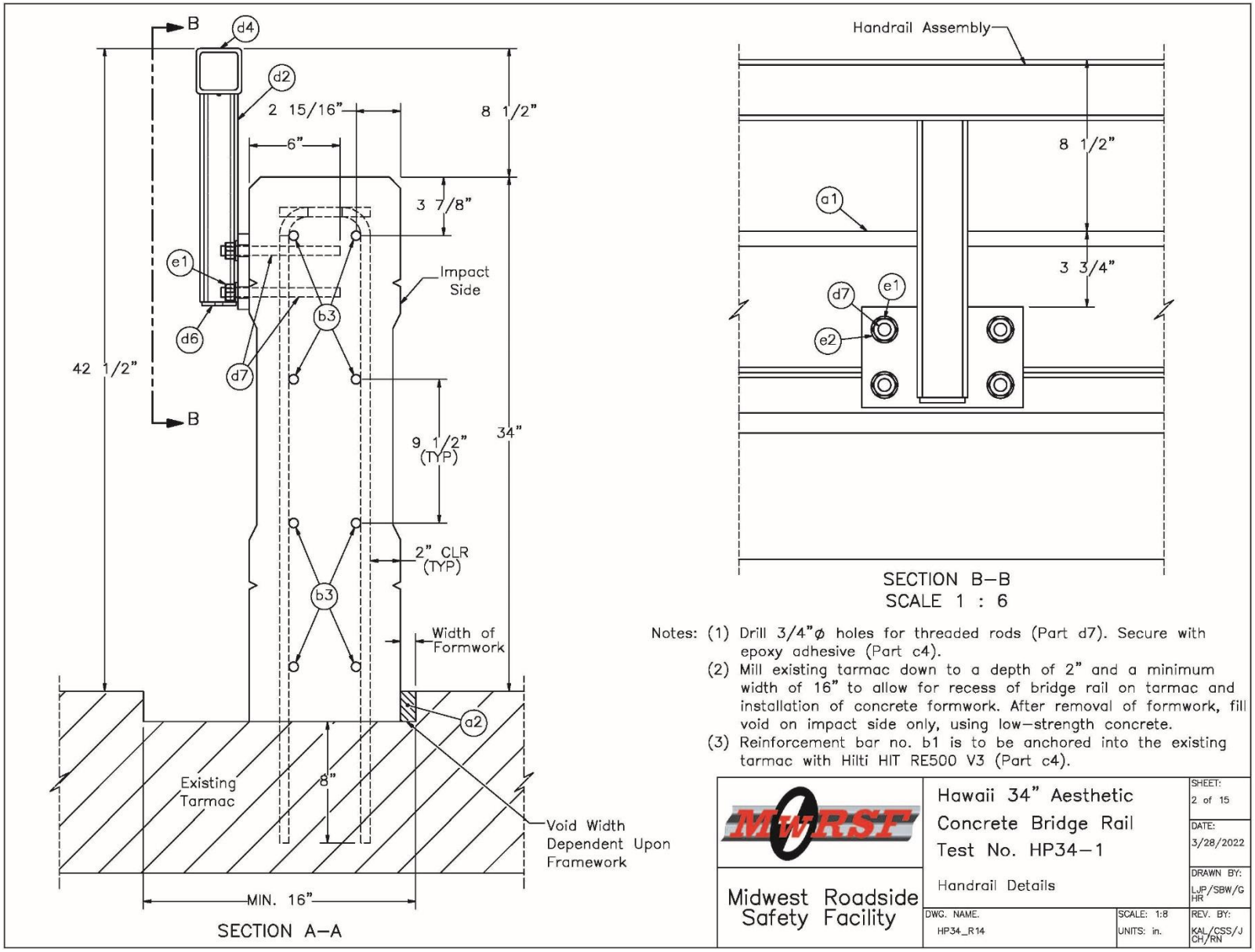


Figure 5. Section Details, Test No. HP34-1

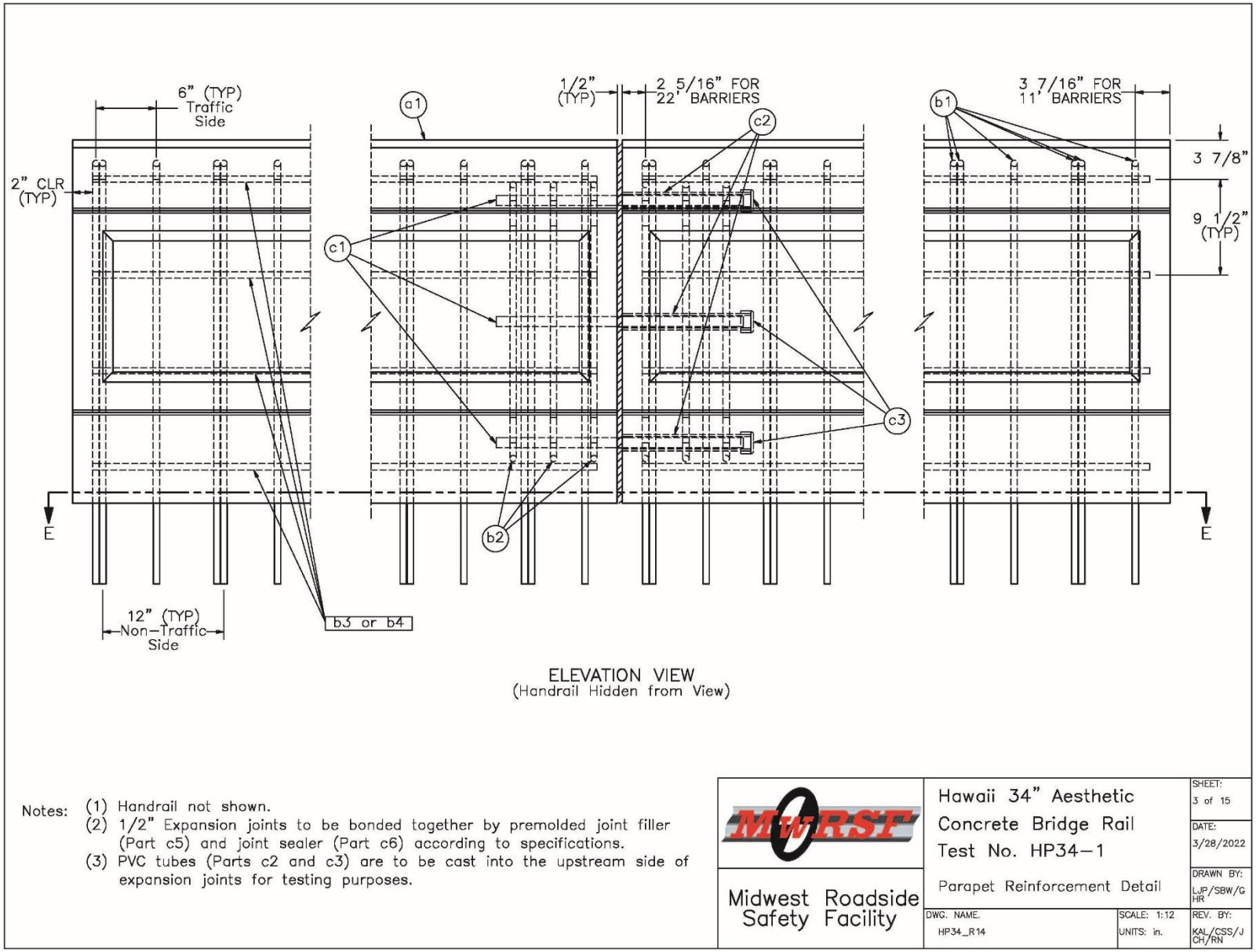


Figure 6. Reinforcement and Expansion Joint Detail, Test No. HP34-1

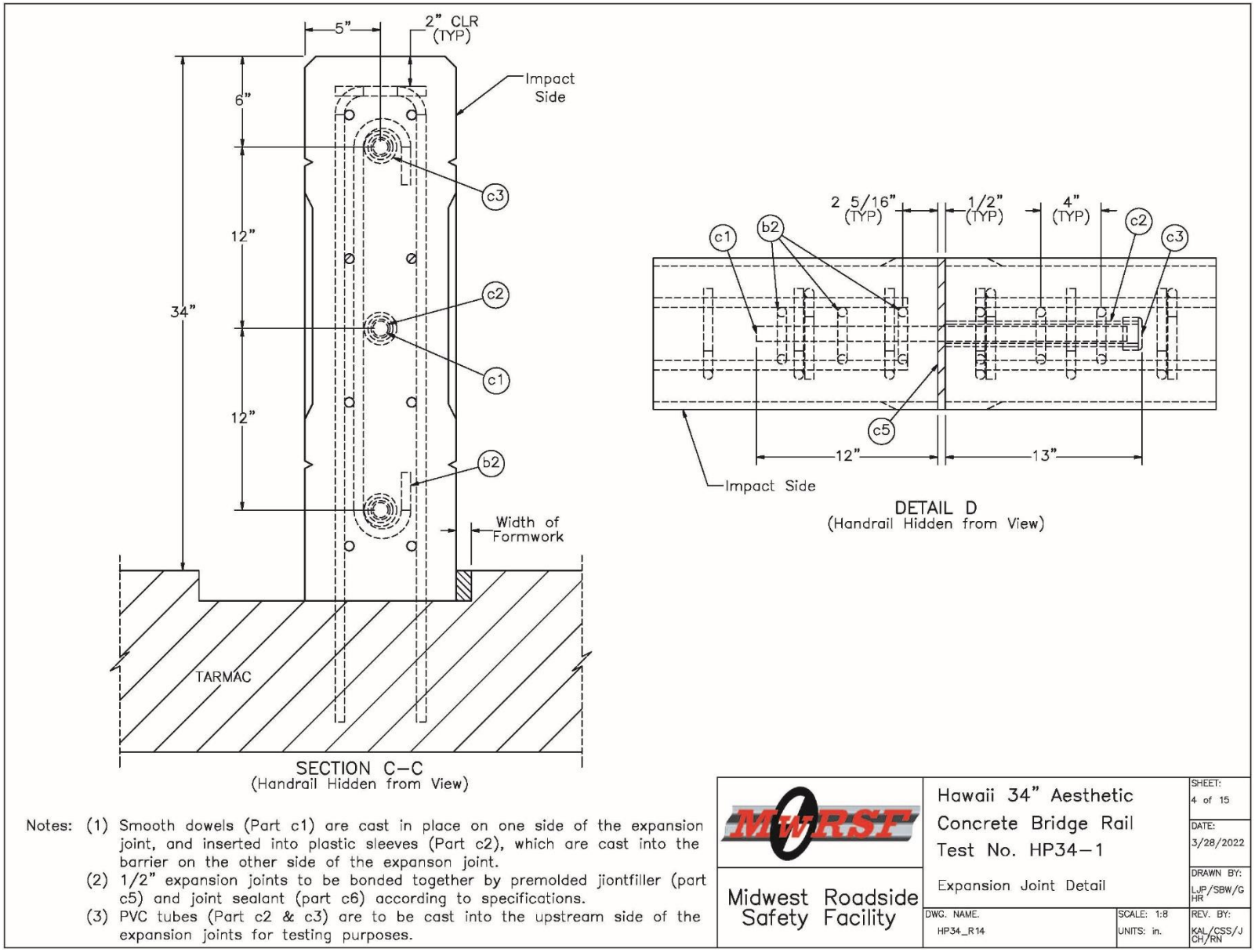


Figure 7. Reinforcement and Expansion Joint Details, Test No. HP34-1

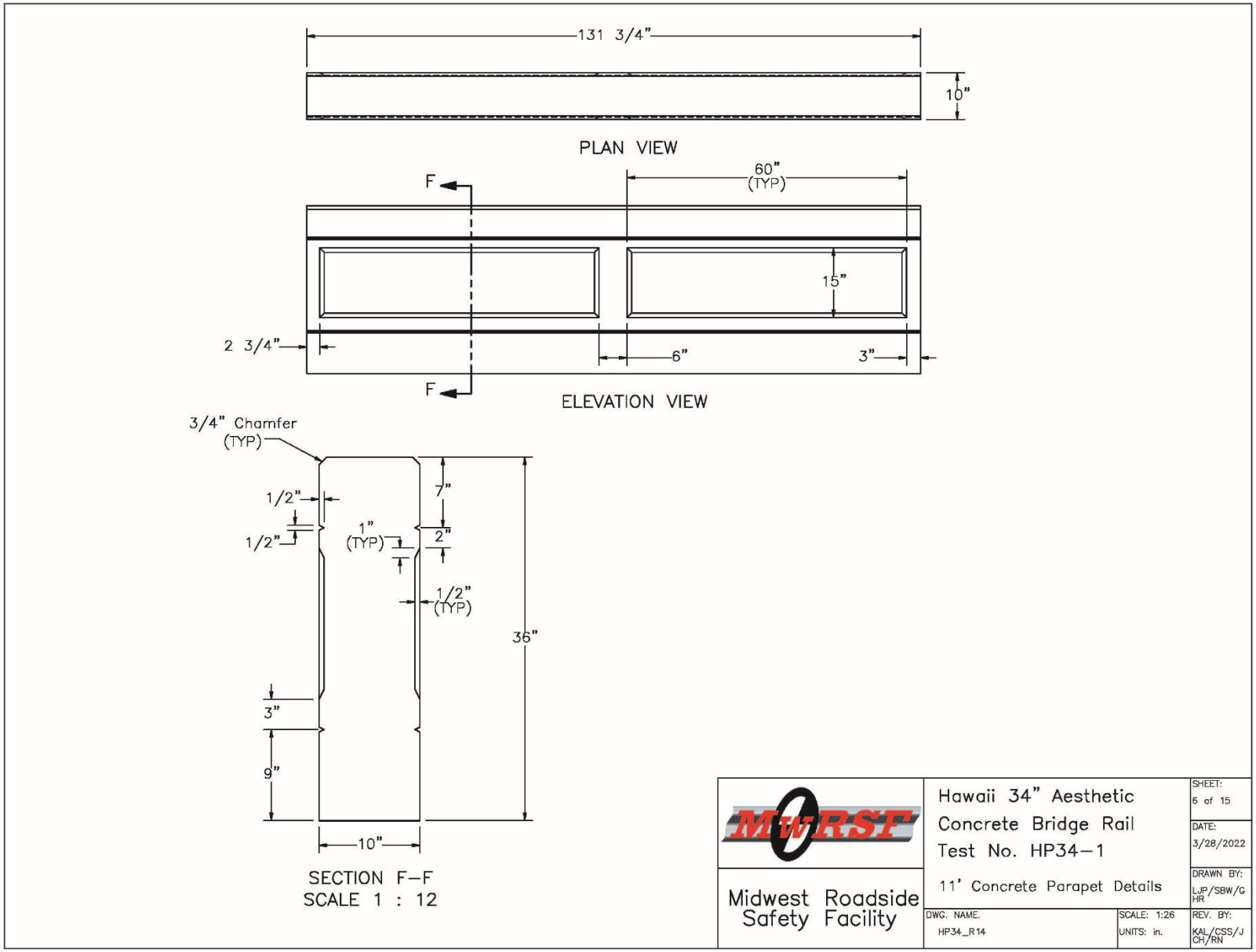


Figure 8. 11-ft Concrete Parapet Details, Test No. HP34-1

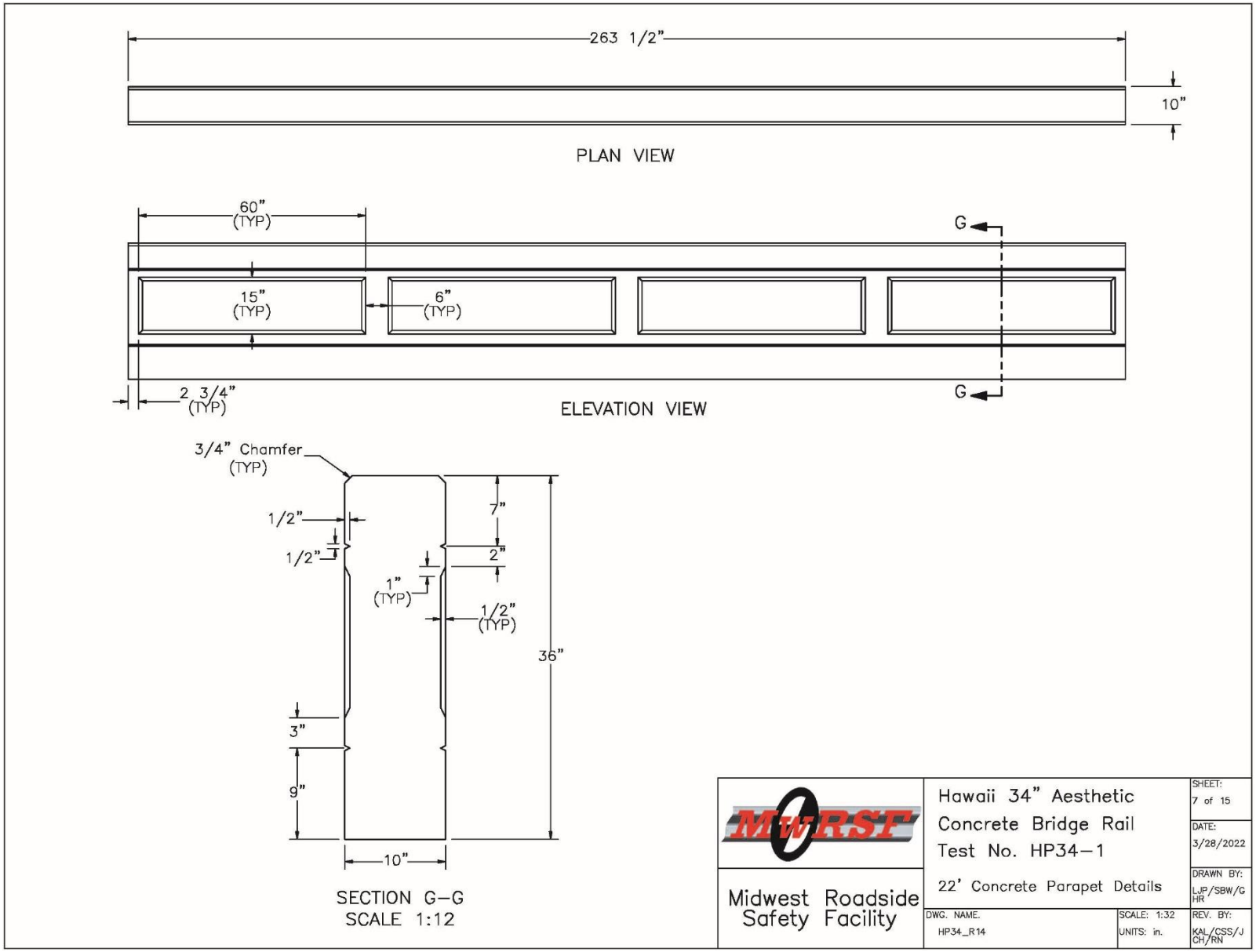


Figure 9. 22-ft Concrete Parapet Details, Test No. HP34-1

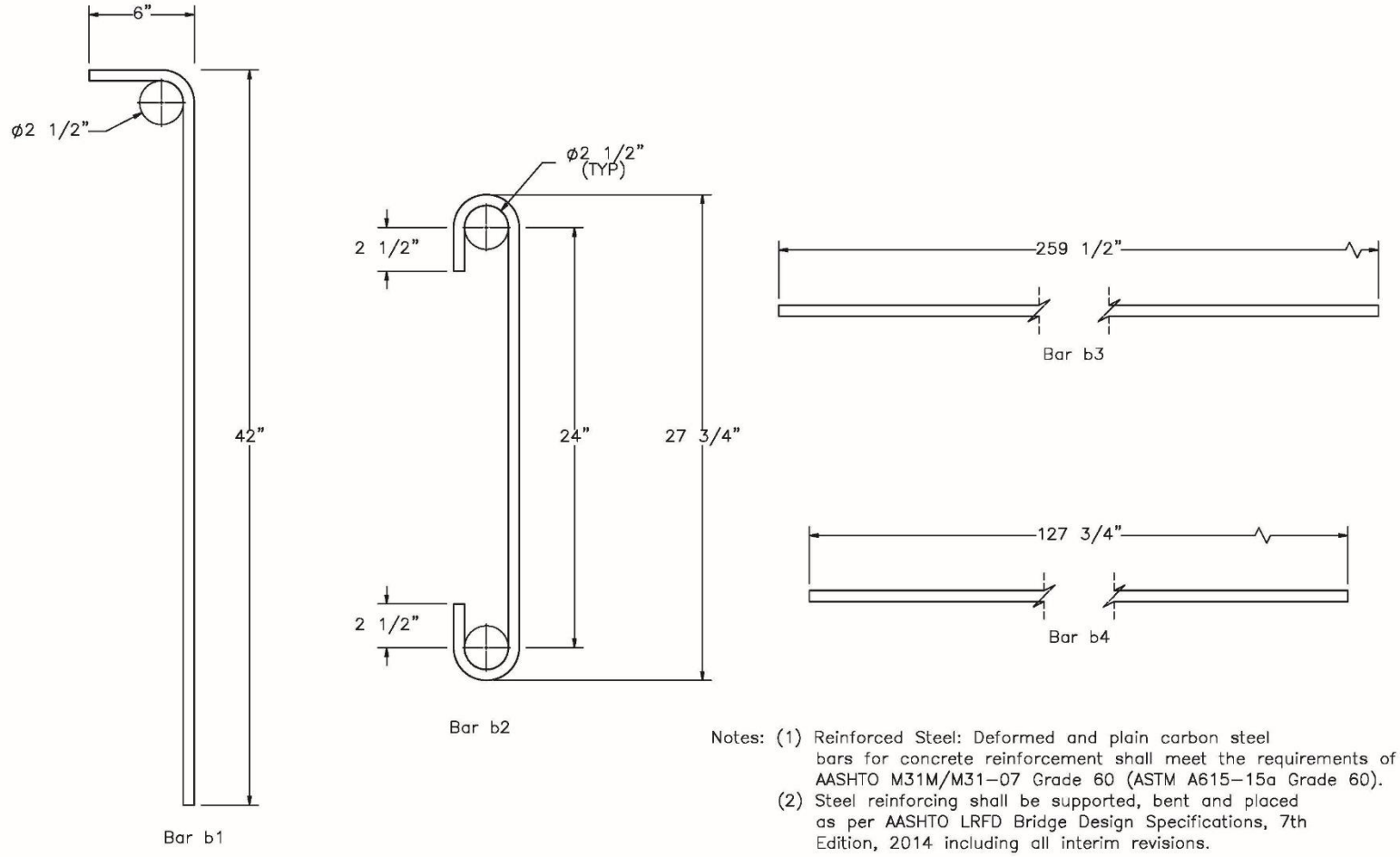


Notes: (1) Reinforced Steel: Deformed and plain carbon steel bars for concrete reinforcement shall meet the requirements of AASHTO M31M/M31–07 Grade 60 (ASTM A615–15a Grade 60).
(2) Steel reinforcing shall be supported, bent and placed as per AASHTO LRFD Bridge Design Specifications, 7th Edition, 2014 including all interim revisions.

Bill of Bars

| Part No. | Bar No. | Qty. | Unbent Length | Material Specification |
|---|---|---|---|---|
| b1 | #5 | 264 | 46 3/4" | ASTM A615 Gr. 60 |
| b2 | #5 | 24 | 38 7/8" | ASTM A615 Gr. 60 |
| b3 | #5 | 24 | 259 1/2" | ASTM A615 Gr. 60 |
| b4 | #5 | 16 | 127 3/4" | ASTM A615 Gr. 60 |

MwRSF
Midwest Roadside Safety Facility

Hawaii 34" Aesthetic Concrete Bridge Rail Test No. HP34–1

Rebar Details

SHEET: 8 of 15
DATE: 3/28/2022
DRAWN BY: LJP/SBW/GHR
DWG. NAME. HP34_R14
SCALE: 1:8
UNITS: in.
REV. BY: KAL/CSS/JCH/RN

Figure 10. Rebar Details, Test Nos. Test No. HP34-1

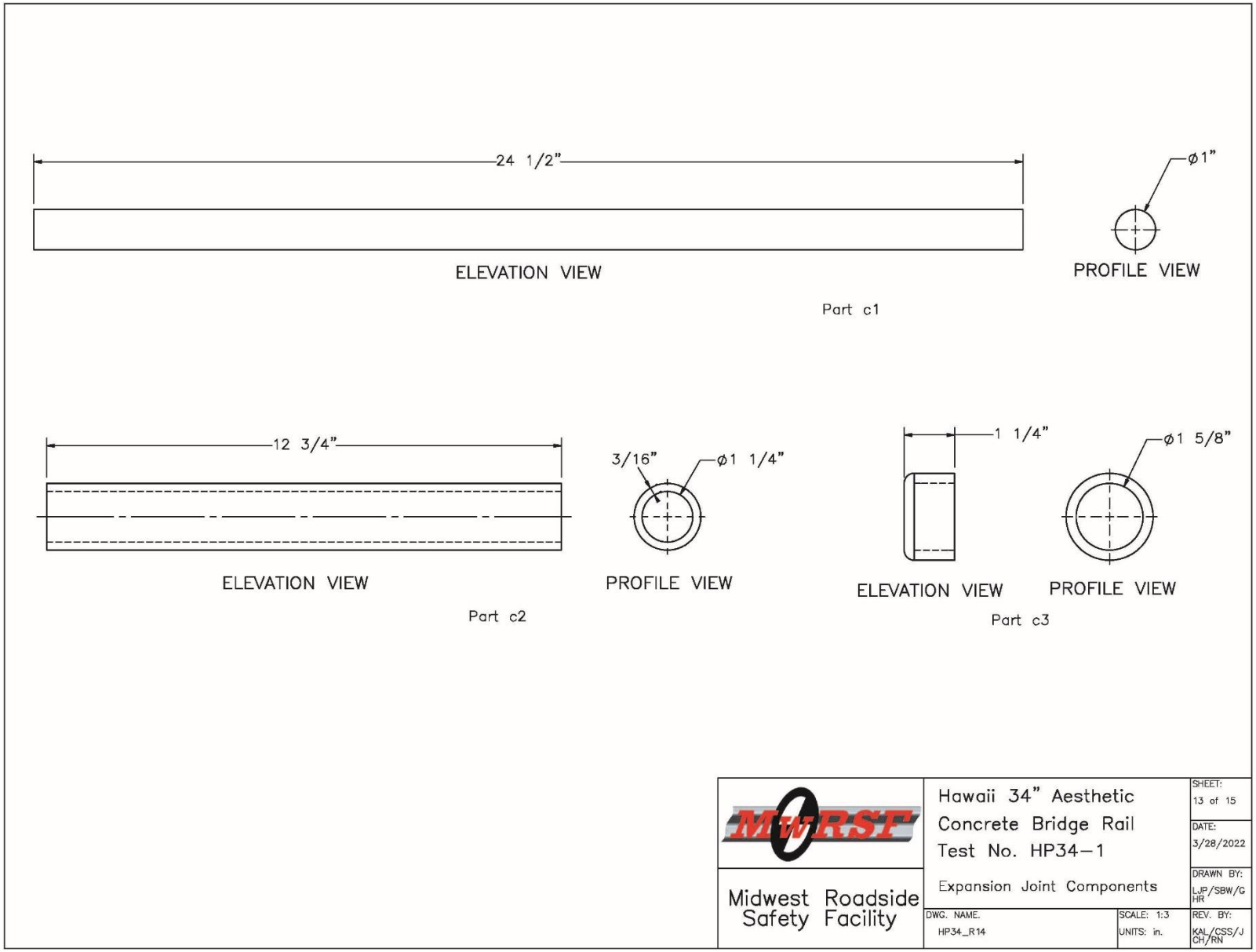


Figure 11. Expansion Joint Components, Test No. HP34-1

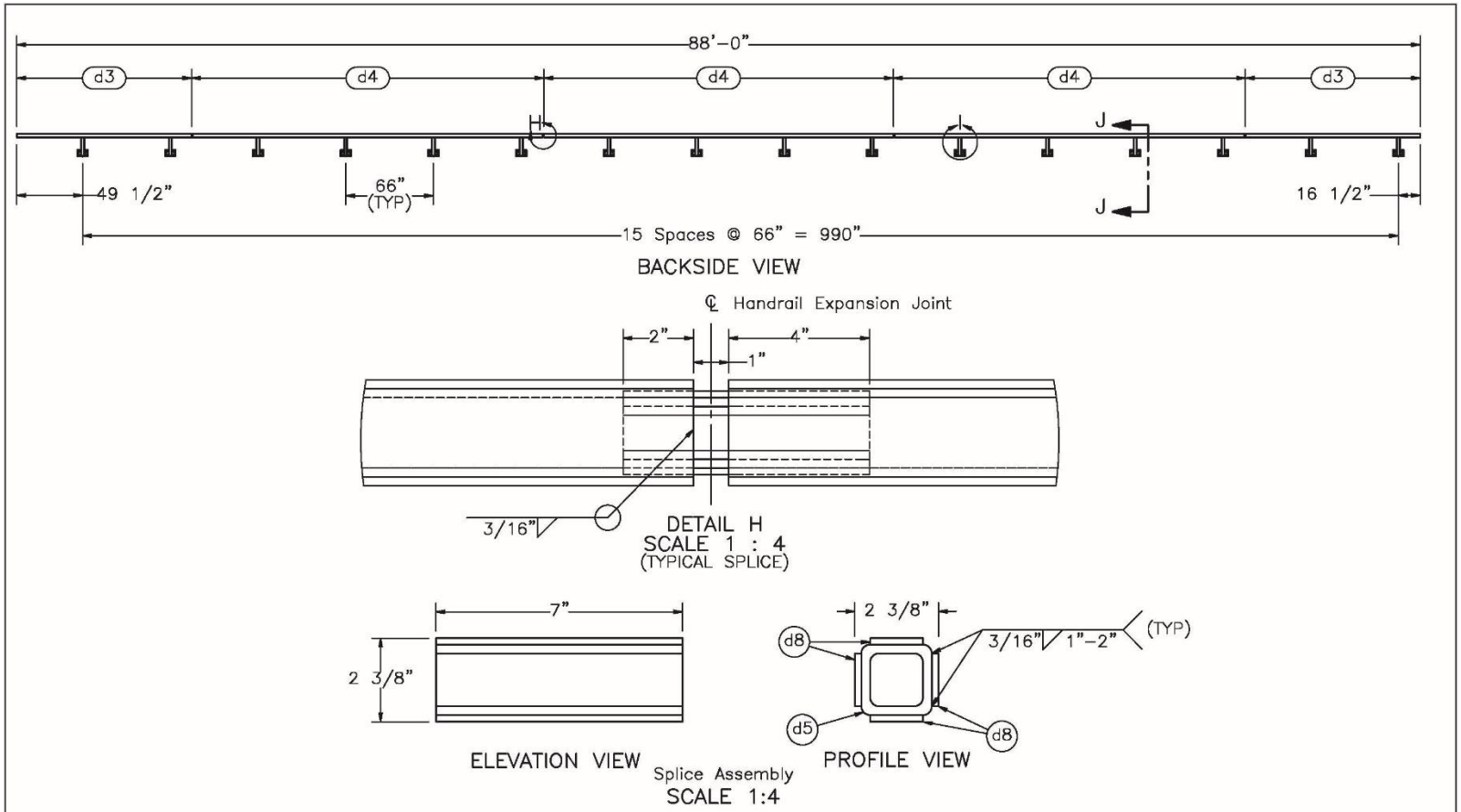


| Item No. | QTY. | Description | Material Specification | Treatment Specification |
|---|---|---|---|---|
| – | 1 | Handrail Assembly | – | ASTM A123 |
| d1 | 16 | 8"x5"x3/4" Steel Plate | ASTM A36 | – |
| d2 | 16 | HSS 2 1/2"x2 1/2"x1/4", 13 3/4" Long | ASTM A500 Gr. B | – |
| d3 | 2 | HSS 3"x3"x1/4", 131 1/2" Long | ASTM A500 Gr. B | – |
| d4 | 3 | HSS 3"x3"x1/4", 263" Long | ASTM A500 Gr. B | – |
| d5 | 4 | HSS 2"x2"x1/4", 7" Long | ASTM A500 Gr. B | – |
| d6 | 16 | 2 1/4"x2 1/4"x1/4" Steel Plate | ASTM A36 | – |
| d8 | 16 | 7"x1 1/2"x3/16" Shim | ASTM A36 | – |

Notes: (1) Handrail tubes (parts d3 and d4) shall be welded directly to shims (part d8) before galvanization.
(2) Handrail assemblies shall be galvanized according to ASTM A123 after all welding is complete.

MwRSF
Midwest Roadside Safety Facility

Hawaii 34" Aesthetic Concrete Bridge Rail
Test No. HP34–1
Handrail Assembly

SHEET: 9 of 15
DATE: 3/28/2022
DRAWN BY: LJP/SBW/GHR
DWG. NAME. HP34_R14
SCALE: 1:106
UNITS: in.
REV. BY: KAL/CSS/JCH/RN

Figure 12. Pedestrian Handrail Assembly, Test No. HP34-1

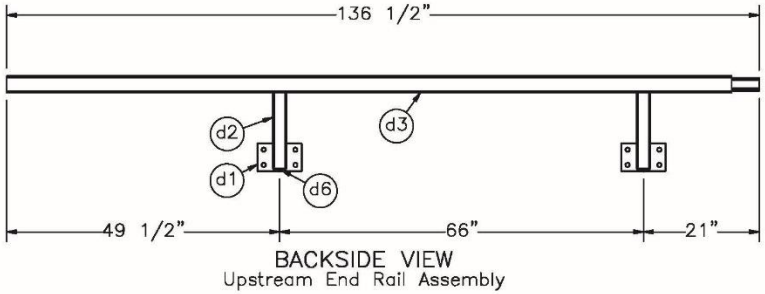


BACKSIDE VIEW
Upstream End Rail Assembly

| Item No. | QTY. | Description | Material Specification | Treatment Specification |
|---|---|---|---|---|
| – | 1 | Upstream End Rail Assembly | – | ASTM A123 |
| d1 | 2 | 8"x5"x3/4" Steel Plate | ASTM A36 | – |
| d2 | 2 | HSS 2 1/2"x2 1/2"x1/4", 13 3/4" Long | ASTM A500 Gr. B | – |
| d3 | 1 | HSS 3"x3"x1/4", 131 1/2" Long | ASTM A500 Gr. B | – |
| d5 | 1 | HSS 2"x2"x1/4", 7" Long | ASTM A500 Gr. B | – |
| d6 | 2 | 2 1/4"x2 1/4"x1/4" Steel Plate | ASTM A36 | – |
| d8 | 4 | 7"x1 1/2"x3/16" Shim | ASTM A36 | – |

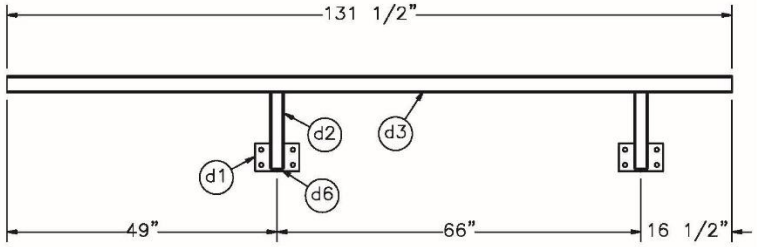


BACKSIDE VIEW
Downsteam End Rail Assembly

| Item No. | QTY. | Description | Material Specification | Treatment Specification |
|---|---|---|---|---|
| – | 1 | Downstream End Rail Assembly | – | ASTM A123 |
| d1 | 2 | 8"x5"x3/4" Steel Plate | ASTM A36 | – |
| d2 | 2 | HSS 2 1/2"x2 1/2"x1/4", 13 3/4" Long | ASTM A500 Gr. B | – |
| d3 | 1 | HSS 3"x3"x1/4", 131 1/2" Long | ASTM A500 Gr. B | – |
| d6 | 2 | 2 1/4"x2 1/4"x1/4" Steel Plate | ASTM A36 | – |

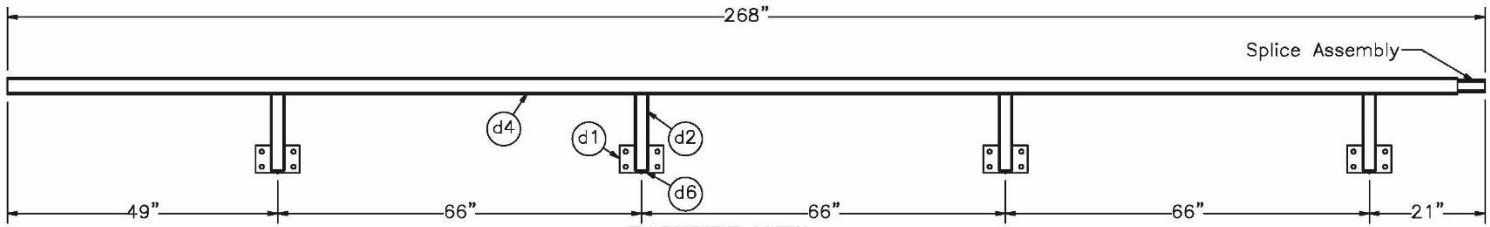


BACKSIDE VIEW
Midspan Rail Assembly

Notes: (1) Handrail assemblies shall be galvanized according to ASTM A123 after all welding is complete.
(2) These sub–assemblies make up the handrail assembly on page 9.

| Item No. | QTY. | Description | Material Specification | Treatment Specification |
|---|---|---|---|---|
| – | 3 | Midspan Rail Assembly | – | ASTM A123 |
| d1 | 4 | 8"x5"x3/4" Steel Plate | ASTM A36 | – |
| d2 | 4 | HSS 2 1/2"x2 1/2"x1/4", 13 3/4" Long | ASTM A500 Gr. B | – |
| d4 | 1 | HSS 3"x3"x1/4", 263" Long | ASTM A500 Gr. B | – |
| d5 | 1 | HSS 2"x2"x1/4", 7" Long | ASTM A500 Gr. B | – |
| d6 | 4 | 2 1/4"x2 1/4"x1/4" Steel Plate | ASTM A36 | – |
| d8 | 4 | 7"x1 1/2"x3/16" Shim | ASTM A36 | – |

Midwest Roadside Safety Facility

Hawaii 34" Aesthetic Concrete Bridge Rail Test No. HP34–1

Handrail Assembly Details

SHEET: 10 of 15
DATE: 3/28/2022
DRAWN BY: LJP/SBW/GHR
DWG. NAME. HP34_R14
SCALE: 1:28
UNITS: in.
REV. BY: KAL/CSS/JCH/RN

Figure 13. Pedestrian Handrail Details, Test No. HP34-1

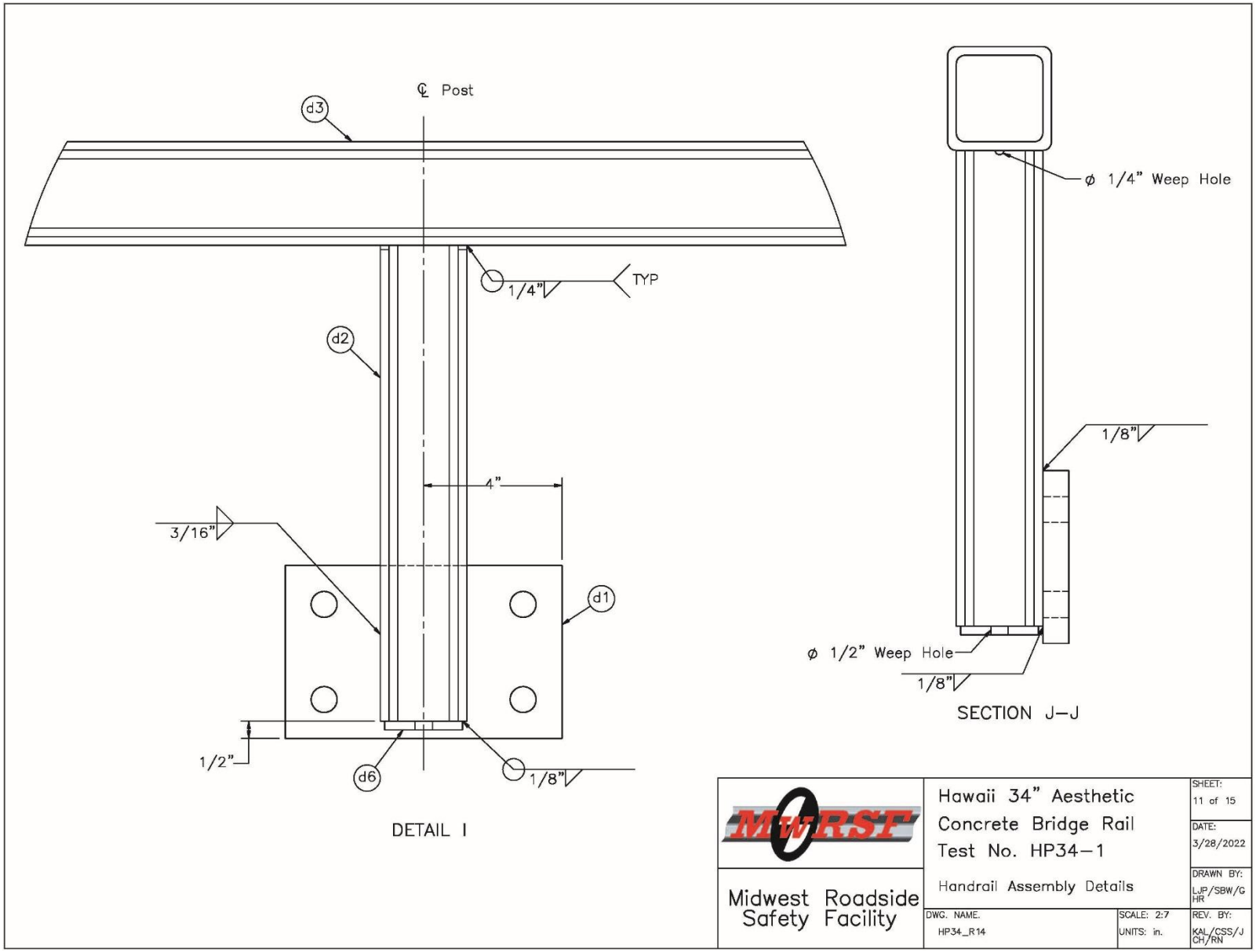


Figure 14. Baseplate, Post, and Handrail Connection Details for Pedestrian Rail, Test No. HP34-1

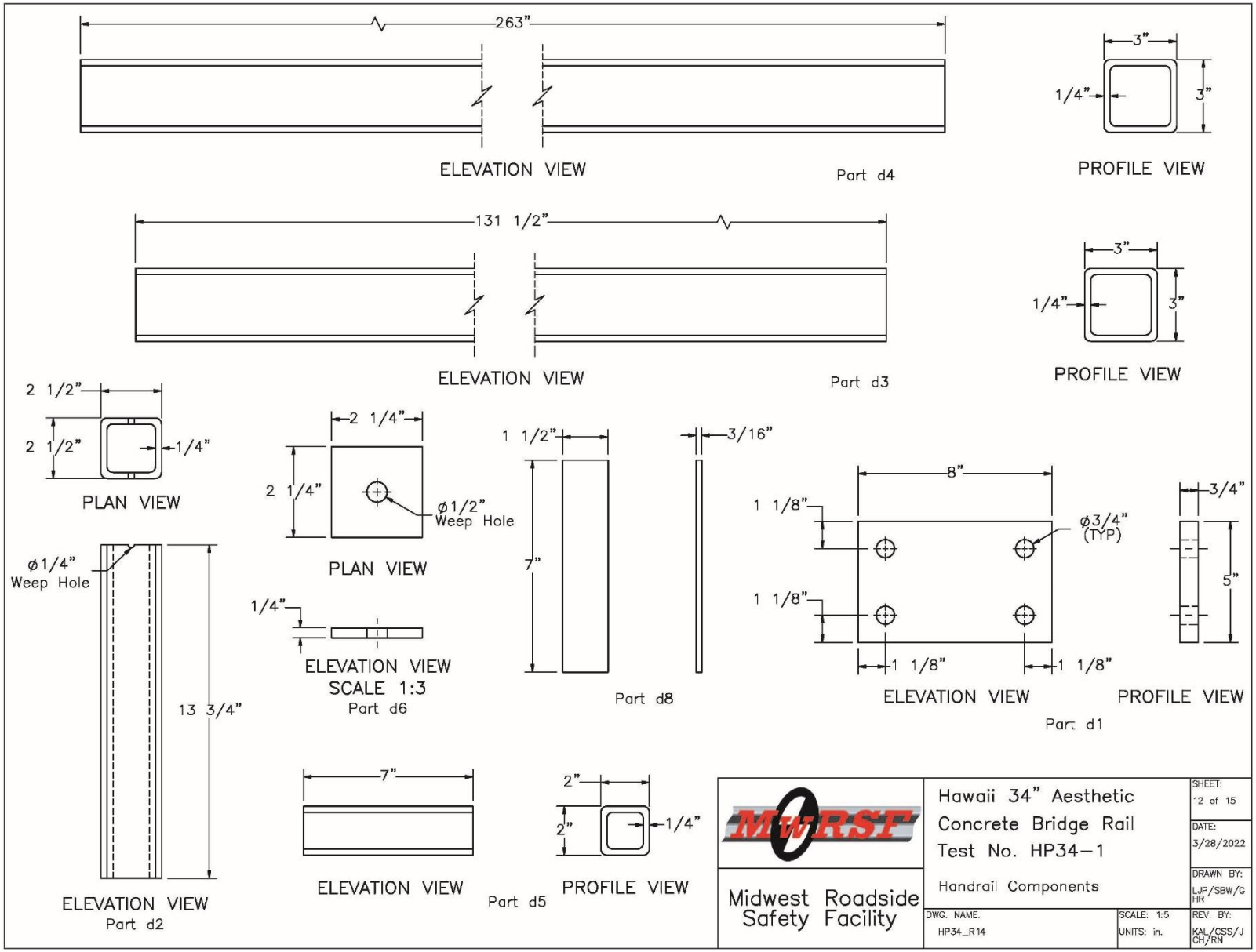


Figure 15. Pedestrian Handrail Component Details, Test No. HP34-1

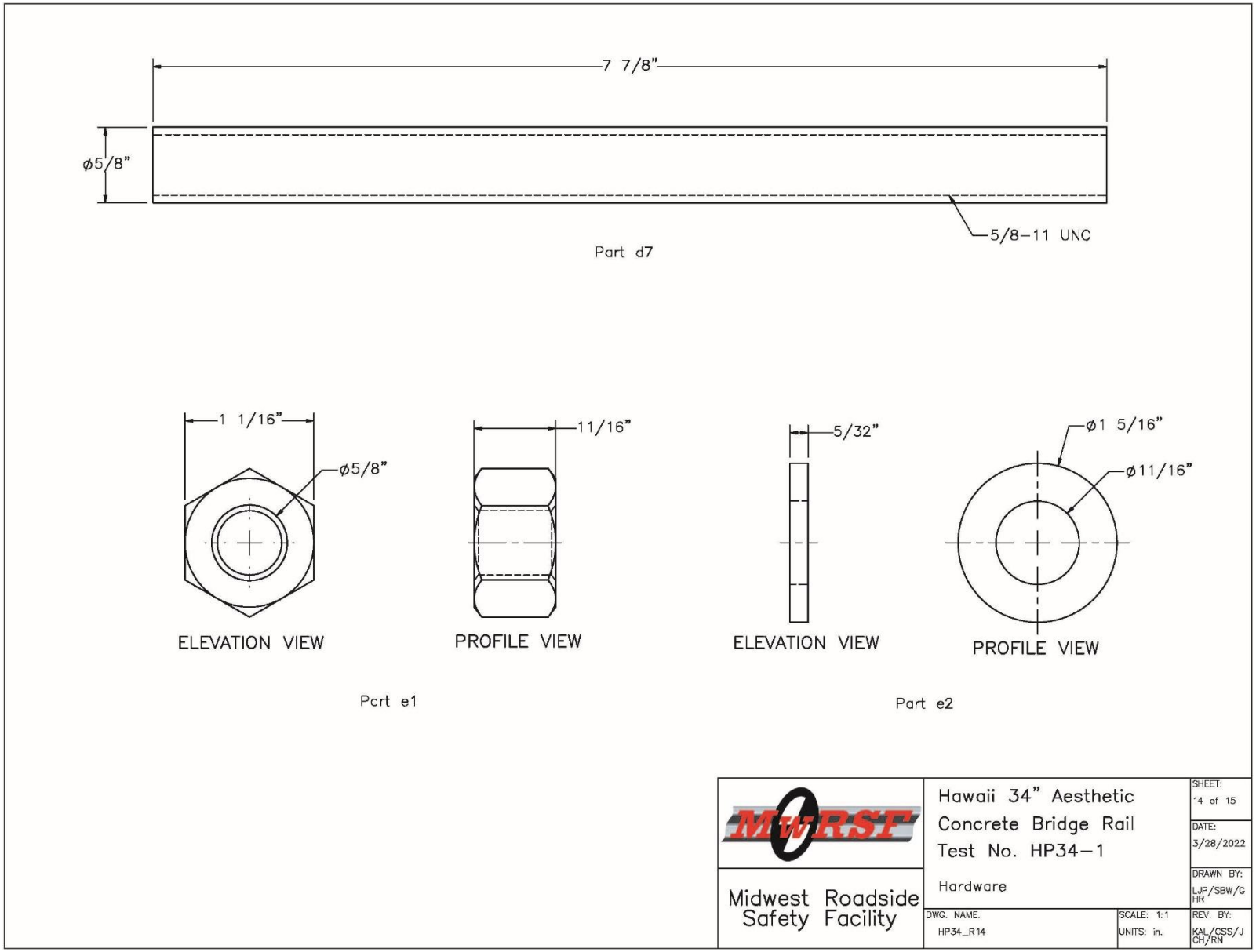


Figure 16. Pedestrian Handrail-to-Parapet Fastener Details, Test No. HP34-1

| Item No. | QTY. | Description | Material Specification | Treatment Specification | Hardware Guide |
|---|---|---|---|---|---|
| a1 | – | Concrete* | Min. f'c = 4,000 psi | – | – |
| a2 | – | Low–Strength Concrete Overlay | Concrete NE Mix 9019 CITY | – | – |
| b1 | 264 | #5 Rebar, 46 3/4" Total Unbent Length | ASTM A615 Gr. 60 | Epoxy Coated (ASTM A775 or A934) | – |
| b2 | 24 | #5 Rebar, 38 7/8" Total Unbent Length | ASTM A615 Gr. 60 | Epoxy Coated (ASTM A775 or A934) | – |
| b3 | 24 | #5 Rebar, 259 1/2" Total Length | ASTM A615 Gr. 60 | Epoxy Coated (ASTM A775 or A934) | – |
| b4 | 16 | #5 Rebar, 127 3/4" Total Length | ASTM A615 Gr. 60 | Epoxy Coated (ASTM A775 or A934) | – |
| c1 | 12 | #8 Smooth Rebar, 24 1/2" Total Length | ASTM A615 Gr. 60 | Epoxy Coated (ASTM A775 or A934) | – |
| c2 | 12 | 1 1/4" Dia. PVC Pipe | Schedule 80 PVC Gr. 12454 | – | – |
| c3 | 12 | 1 1/4" Dia. PVC End Cap | Schedule 80 PVC Gr. 12454 | – | – |
| c4 | – | Epoxy Adhesive | Hilti HIT RE–500 V3 | – | – |
| c5 | – | Expansion Joint Filler | AASHTO M33, M153, or M213 | – | – |
| c6 | – | Expansion Joint Sealant | AASHTO M173, M282, M301, ASTM D3581, or ASTM D5893 | – | – |
| d1 | 16 | 8"x5"x3/4" Steel Plate | ASTM A36 | – | – |
| d2 | 16 | HSS 2 1/2"x2 1/2"x1/4", 13 3/4" Long | ASTM A500 Gr. B | – | – |
| d3 | 2 | HSS 3"x3"x1/4", 131 1/2" Long | ASTM A500 Gr. B | – | – |
| d4 | 3 | HSS 3"x3"x1/4", 263" Long | ASTM A500 Gr. B | – | – |
| d5 | 4 | HSS 2"x2"x1/4", 7" Long | ASTM A500 Gr. B | – | – |
| d6 | 16 | 2 1/4"x2 1/4"x1/4" Steel Plate | ASTM A36 | – | – |
| d7 | 64 | 5/8"–11 UNC, 7 7/8" Long Threaded Rod | ASTM F1554–15 Gr. 105 | ASTM F2329 | – |
| d8 | 16 | 7"x1 1/2"x3/16" Shim | ASTM A36 | – | – |
| e1 | 64 | 5/8"–11 UNC Heavy Hex Nut | ASTM A563–15 Grade DH | ASTM F2329 | FNX16b |
| e2 | 64 | 5/8" Dia. Hardened Washer | ASTM F436 | ASTM F2329 | FWC16b |

*NE Mix 47B1S/1PF4000HW was used for testing purposes.

| | | | |
|---|---|---|---|
| MwRSF Midwest Roadside Safety Facility | Hawaii 34" Aesthetic Concrete Bridge Rail Test No. HP34–1 Bill of Materials | | SHEET: 15 of 15 |
| | | | DATE: 3/28/2022 |
| | | | DRAWN BY: LJP/SBW/GHR |
| | DWG. NAME. HP34_R14 | SCALE: None UNITS: in. | REV. BY: KAL/CSS/JCH/RN |

Figure 17. Bill of Materials, Test No. HP34-1

Figure 18. Construction Process Photographs, Test No. HP34-1

Figure 19. Construction Process Photographs, Test No. HP34-1

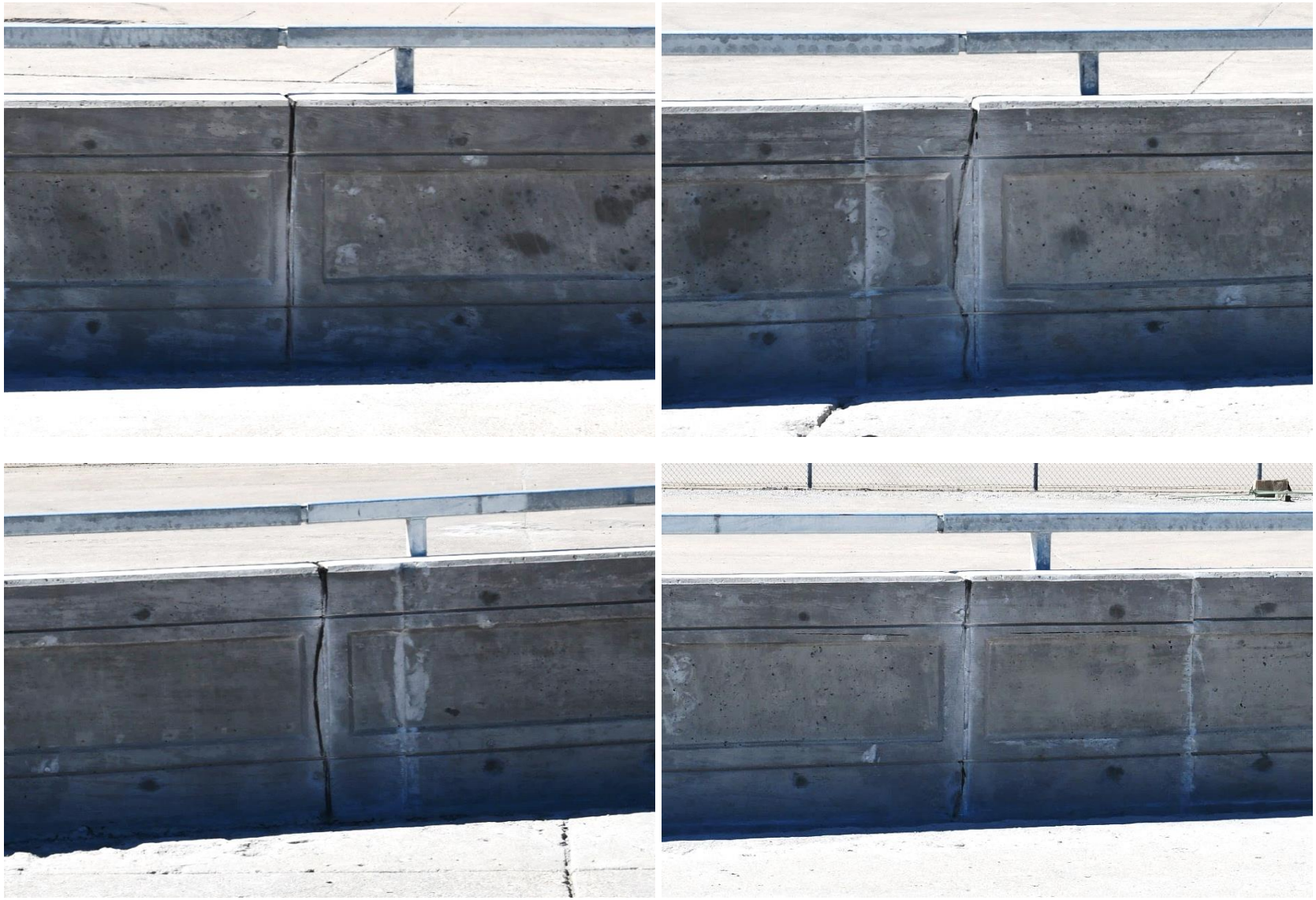

Figure 20. Final Shape of Premolded Joint Sealer Between Concrete Parapet Sections

Figure 21. Test Installation, Test No. HP34-1

Figure 22. Test Installation, Test No. HP34-1

# 4 TEST CONDITIONS

## 4.1 Test Facility

The Outdoor Test Site is located at the Lincoln Air Park on the northwest side of the Lincoln Municipal Airport and is approximately 5 miles northwest of the University of Nebraska-Lincoln.

## 4.2 Vehicle Tow and Guidance System

A reverse-cable, tow system with a 1:2 mechanical advantage was used to propel the test vehicle. The distance traveled and the speed of the tow vehicle were one-half that of the test vehicle. The test vehicle was released from the tow cable before impact with the barrier system. A digital speedometer on the tow vehicle increased the accuracy of the test vehicle impact speed.

A vehicle guidance system developed by Hinch [5] was used to steer the test vehicle. A guide flag, attached to the left-front wheel and the guide cable, was sheared off before impact with the barrier system. The ⅜-in. diameter guide cable was tensioned to approximately 3,500 lb and supported both laterally and vertically every 100 ft by hinged stanchions. The hinged stanchions stood upright while holding up the guide cable, but as the vehicle was towed down the line, the guide flag struck and knocked each stanchion to the ground.

## 4.3 Test Vehicle

For test no. HP34-1, a 2016 Ram 1500 crew cab pickup truck was used as the test vehicle. The curb, test inertial, and gross static vehicle weights were 5,117 lb, 5,002 lb, and 5,161 lb, respectively. The test vehicle is shown in Figures 23 and 24, and vehicle dimensions are shown in Figure 25.

The longitudinal component of the center of gravity (c.g.) was determined using the measured axle weights. The Suspension Method [6] was used to determine the vertical component of the c.g. for the pickup truck. This method is based on the principle that the c.g. of any freely suspended body is in the vertical plane through the point of suspension. The vehicle was suspended successively in three positions, and the respective planes containing the c.g. were established. The intersection of these planes pinpointed the final c.g. location for the test inertial condition. The location of the final c.g. is shown in Figures 25 and 26. Data used to calculate the location of the c.g. and ballast information are shown in Appendix B.

Square, black- and white-checkered targets were placed on the vehicle for reference to be viewed from the high-speed digital video cameras and aid in the video analysis, as shown in Figure 26. Round, checkered targets were placed at the c.g. on the left-side door, the right-side door, and the roof of the vehicle.The front wheels of the test vehicle were aligned to vehicle standards except the toe-in value was adjusted to zero such that the vehicles would track properly along the guide cable. A 5B flash bulb was mounted on the vehicle's right-side windshield wiper and was fired by a pressure tape switch mounted at the impact corner of the bumper. The flash bulb was fired upon initial impact with the test article to create a visual indicator of the precise time of impact on the high-speed digital videos. A radio-controlled brake system was installed in the test vehicle so the vehicle could be brought safely to a stop after the test.

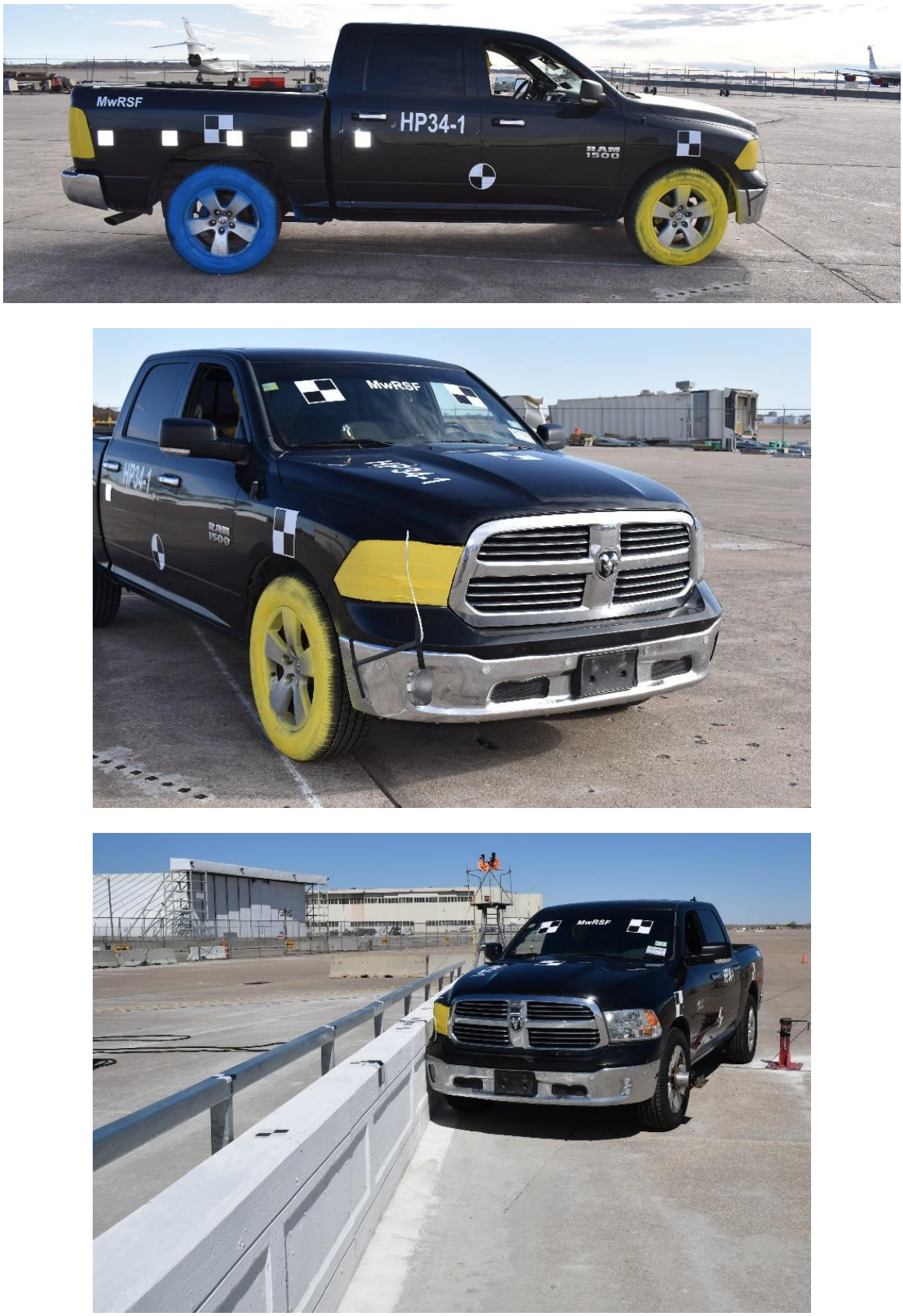


Figure 23. Test Vehicle, Test No. HP34-1

Figure 24. Test Vehicle's Interior Floorboards and Undercarriage

| | | | | | |
|---|---|---|---|---|---|
| | | Test Name: | HP34 | VIN No: | 1C6RR6LG3GS201339 |
| Model Year: | 2016 | Make: | Dodge | Model: | Ram 1500 crew cab |
| Tire Size: | 275/60 R20 | Tire Inflation Pressure: | 40 psi | Odometer: | 173714 |

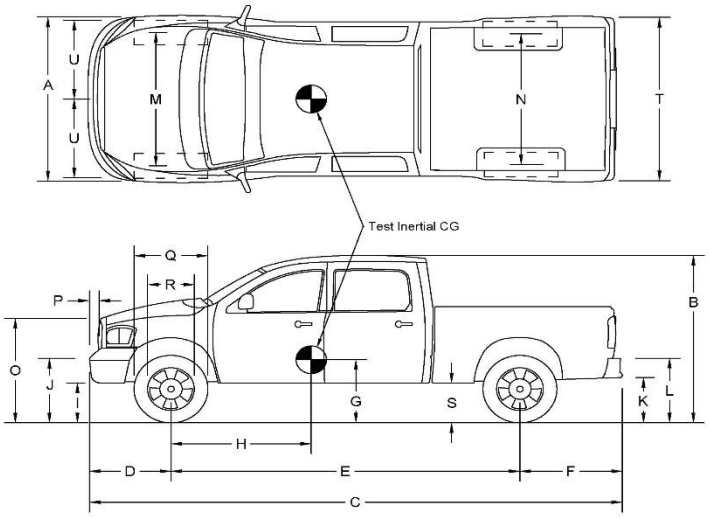


**Vehicle Geometry - in. (mm)**
Target Ranges listed below

| | | | | | | | |
|---|---|---|---|---|---|---|---|
| A: | 77 1/4 | 1962 3/20 | 78±2 (1950±50) | B: | 75 5/16 | 1912 15/16 | |
| C: | 229 1/2 | 5829 3/10 | 237±13 (6020±325) | D: | 41 | 1041 2/5 | 39±3 (1000±75) |
| E: | 140 3/8 | 3565 21/40 | 148±12 (3760±300) | F: | 48 1/8 | 1222 3/8 | |
| G: | 29 | 736 3/5 | min: 28 (710) | H: | 65 | 1651 | 63±4 (1575±100) |
| I: | 13 1/2 | 342 9/10 | | J: | 24 1/2 | 622 3/10 | |
| K: | 21 1/4 | 539 3/4 | | L: | 29 1/2 | 749 3/10 | |
| M: | 68 1/8 | 1730 3/8 | 67±1.5 (1700±38) | N: | 68 | 1727 1/5 | 67±1.5 (1700±38) |
| O: | 45 | 1143 | 43±4 (1100±75) | P: | 2 1/4 | 57 3/20 | |
| Q: | 32 1/2 | 825 1/2 | | R: | 21 1/2 | 546 1/10 | |
| S: | 15 | 381 | | T: | 77 1/4 | 1962 3/20 | |

| | | |
|---|---|---|
| U (impact width): | 37 | 939 4/5 |
| Wheel Center Height (Front): | 15 7/8 | 403 9/40 |
| Wheel Center Height (Rear): | 15 7/8 | 403 9/40 |
| Wheel Well Clearance (Front): | 35 1/2 | 901 7/10 |
| Wheel Well Clearance (Rear): | 38 5/8 | 981 3/40 |
| Bottom Frame Height (Front): | 18 1/2 | 469 9/10 |
| Bottom Frame Height (Rear): | 26 1/4 | 666 3/4 |
| Engine Type: | 6cyl. Gas | |
| Engine Size: | 3.6L | |
| Transmission Type: | Automatic | |
| Drive Type: | RWD | |
| Cab Style: | Crew Cab | |
| Bed Length: | 67" | |

**Mass Distribution - lb (kg)**

| | | | | | |
|---|---|---|---|---|---|
| Gross Static | LF | 1407 (638) | RF | 1374 (623) | |
| | LR | 1178 (534) | RR | 1202 (545) | |

| Weights lb (kg) | Curb | Test Inertial | Gross Static |
|---|---|---|---|
| W-front | 2748 (1246) | 2686 (1218) | 2781 (1261) |
| W-rear | 2369 (1075) | 2316 (1051) | 2380 (1080) |
| W-total | 5117 (2321) | 5002 (2269) | 5161 (2341) |
| | | 5000±110 (2270±50) | 5165±110 (2343±50) |

| GVWR Ratings - lb | |
|---|---|
| Front | 3700 |
| Rear | 3900 |
| Total | 6800 |

| Surrogate Occupant Data | |
|---|---|
| Type: | Hybrid II |
| Mass: | 159 lb |
| Seat Position: | Right/passenger |

Note any damage prior to test: Light dents in center of front bumper. Dent in left end of rear bumper

Figure 25. Vehicle Dimensions, Test No. HP34-1

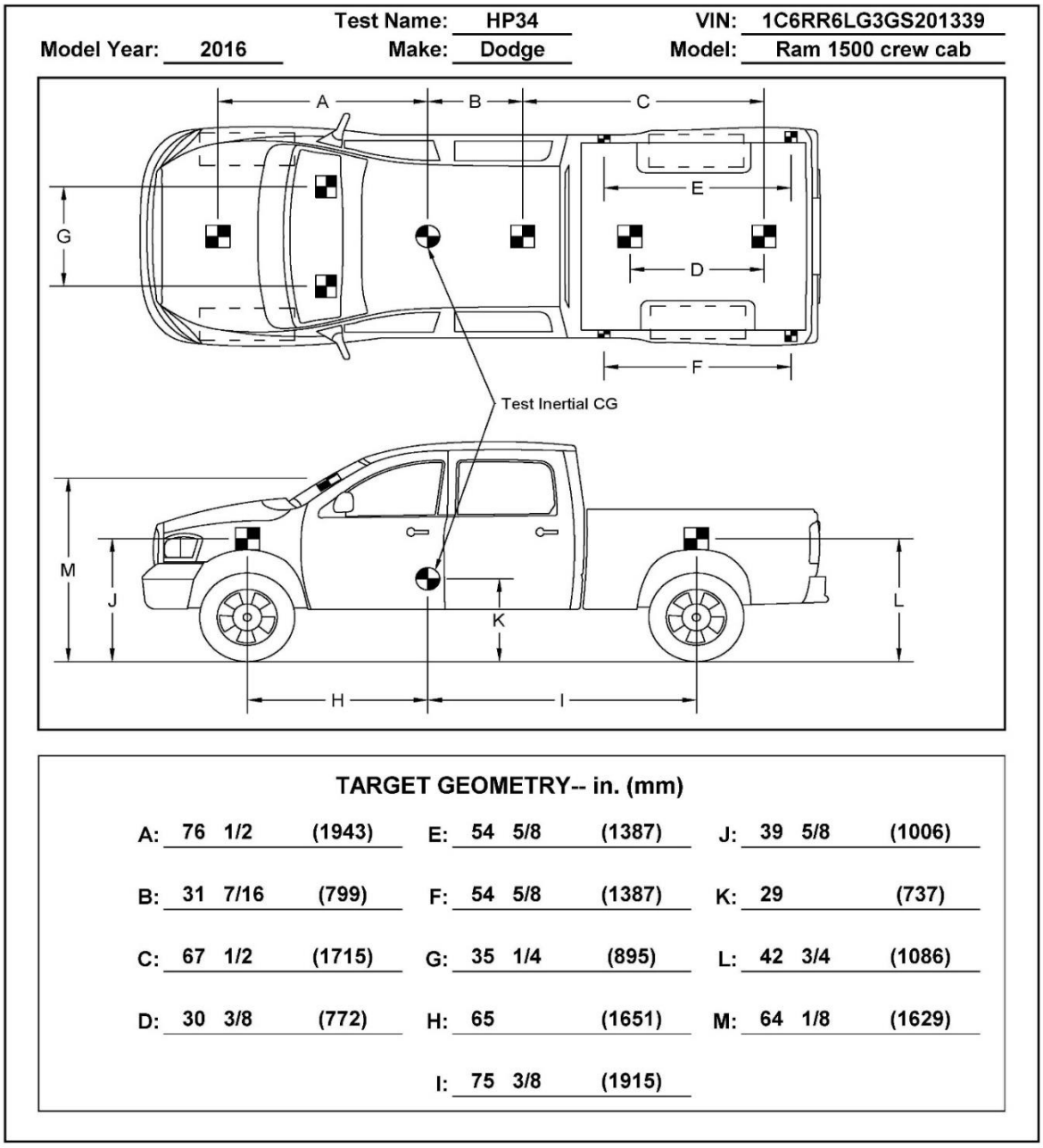


Figure 26. Target Geometry, Test No. HP34-1

## 4.4 Simulated Occupant

For test no. HP34-1, a Hybrid II 50$^{th}$-Percentile, Adult Male Dummy equipped with footwear was placed in the right-front seat of the test vehicle with the seat belt fastened. The dummy had a final weight of 159 lb. As recommended by MASH 2016, the simulated occupant was not included in calculating the c.g. location.

## 4.5 Data Acquisition Systems

### 4.5.1 Accelerometers and Rate Transducers

The accelerometer and rate transducer systems used in the full-scale crash testing were the SLICE-1 and SLICE-2 units described below. Units were positioned near the c.g. of the test vehicle and the SLICE-2 unit was designated as primary Data obtained in dynamic testing was filtered using the SAE Class 60 and the SAE Class 180 Butterworth filter conforming to the SAEJ211/1 specifications [7].

The SLICE-1 and SLICE-2 units were modular data acquisition systems manufactured by Diversified Technical Systems, Inc. of Seal Beach, California. Triaxial acceleration and angular rate sensor modules were mounted inside the bodies of custom-built SLICE 6DX event data recorders equipped with 7GB of non-volatile flash memory and recorded data at 10,000 Hz to the onboard microprocessor. The accelerometers had a range of ±500g's in each of three directions (longitudinal, lateral, and vertical) and a 1,650 Hz (CFC 1000) anti-aliasing filter. The SLICE MICRO Triax ARS had a range of 1,500 degrees/sec in each of three directions (roll, pitch, and yaw). The raw angular rate measurements were downloaded, converted to the proper Euler angles for analysis, and plotted. The "SLICEWare" computer software program and a customized Microsoft Excel worksheet were used to analyze and plot both the accelerometer and angular rate sensor data.

### 4.5.2 Retroreflective Optic Speed Trap

The retroreflective optic speed trap was used to determine the speed of the test vehicle before impact. Five retroreflective targets, spaced at approximately 18-in. intervals, were applied to the side of the vehicle. When the emitted beam of light was reflected by the targets and returned to the Emitter/Receiver, a signal was sent to the data acquisition computer, recording at 10,000 Hz, as well as the external LED box activating the LED flashes. The speed was then calculated using the spacing between the retroreflective targets and the time between the signals. LED lights and high-speed digital video analysis are only used as a backup in the event that vehicle speeds cannot be determined from the electronic data.

### 4.5.3 Digital Photography

Five AOS high-speed digital video cameras, six GoPro digital video cameras, and three Panasonic digital video cameras were utilized to film test no. HP34-1. Note that camera AOS 12 did not capture video due to technical difficulties. Camera details, camera operating speeds, lens information, and a schematic of the camera locations relative to the system are shown in Figure 27.

The high-speed videos were analyzed using TEMA Motion and RedLake MotionScope software programs. Actual camera speed and camera divergence factors were considered in the analysis of the high-speed videos. A digital still camera was also used to document pre- and post-test conditions for the test.

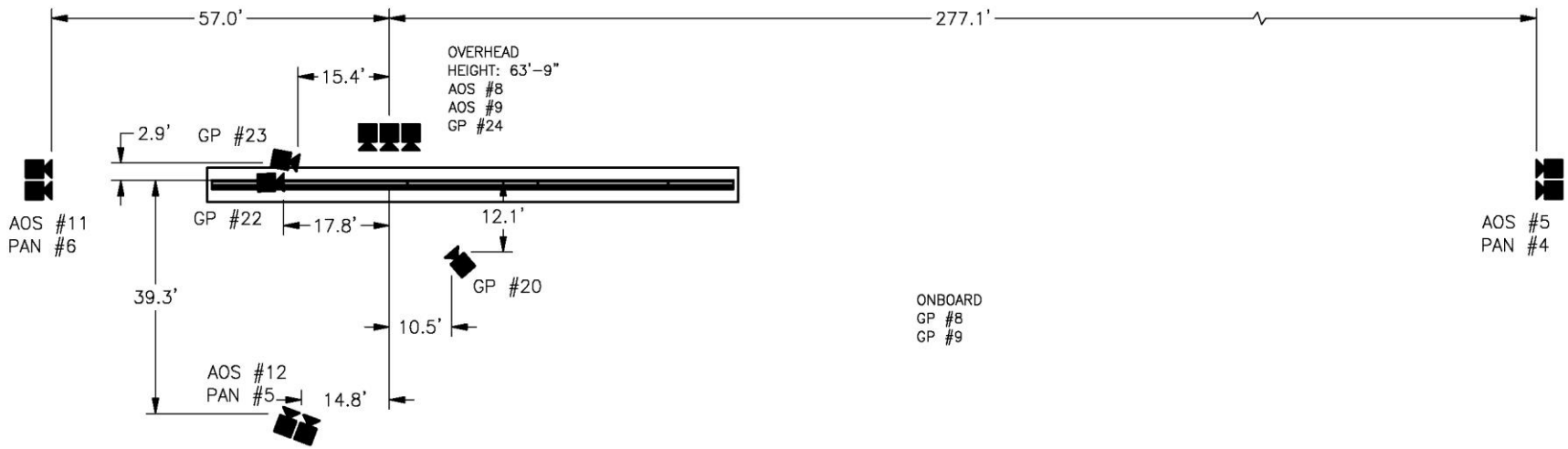


| No. | Type | Operating Speed (frames/sec) | Lens | Lens Setting |
|---|---|---|---|---|
| AOS-5 | AOS X-PRI Gigabit | 500 | Kona 100 | |
| AOS-8 | AOS S-VIT 1531 | 500 | 16 mm | |
| AOS-9 | AOS TRI-VIT | 500 | 12 mm | |
| AOS-11 | AOS J-PRI | 500 | 50 mm Nikon | |
| AOS-12* | AOS J-PRI | 500 | Sigma 24-135 | 28 |
| GP-8 | GoPro Hero 4 | 120 | | |
| GP-9 | GoPro Hero 4 | 120 | | |
| GP-20 | GoPro Hero 6 | 240 | | |
| GP-22 | GoPro Hero 7 | 240 | | |
| GP-23 | GoPro Hero 7 | 240 | | |
| GP-24 | GoPro Hero 7 | 240 | | |
| PAN-4 | Panasonic HC-V770 | 120 | | |
| PAN-5 | Panasonic HC-VX981 | 120 | | |
| PAN-6 | Panasonic HC-VX981 | 120 | | |

*Video not captured due to technical difficulties.

Figure 27. Camera Locations, Speeds, and Lens Settings, Test No. HP34-1

# 5 FULL-SCALE CRASH TEST NO. HP34-1

## 5.1 Weather Conditions

Test no. HP34-1 was conducted on March 25, 2022 at approximately 2:30 p.m. The weather conditions as per the National Oceanic and Atmospheric Administration (NE US WBAN: 72551014939 (KLNK)) were reported and are shown in Table 3.

Table 3. Weather Conditions, Test No. HP34-1

| | |
|---|---|
| Temperature | 58° F |
| Humidity | 18% |
| Wind Speed | 21 mph |
| Wind Direction | 330° from True North |
| Sky Conditions | Sunny |
| Visibility | 10 Statute Miles |
| Pavement Surface | Dry |
| Previous 3-Day Precipitation | 0.02 in. |
| Previous 7-Day Precipitation | 0.96 in. |

## 5.2 Test Description

Initial vehicle impact was to occur 85 in. upstream from the upstream side face of post no. 7, as shown in Figure 28, which was selected based on the point of maximum extension of the hood and fender during test no. H34BR-1 [1]. Test no. H34BR-1, a similar installation of this system, was already subjected to a critical evaluation of capacity and the contribution of an expansion gap to vehicle redirection and did not result in the vehicle snag or excessive occupant compartment deformation nor occupant risk when impacting at the expansion joint. The 5,002-lb crew cab pickup truck impacted the HDOT's 34-in. tall, aesthetic concrete bridge rail with pedestrian handrail system at a speed of 62.2 mph and at an angle of 24.9 degrees. The actual point of impact was 10⅛ in. upstream from the targeted point of impact, or 95⅛ in. upstream from the upstream face of post no. 7. After brakes were applied, the vehicle came to rest 194.4 ft downstream from the point of impact and 12.1 ft laterally behind the barrier, facing downstream.

A detailed description of the sequential impact events is contained in Table 4. Sequential photographs are shown in Figures 29 and 30. Documentary photographs of the crash test are shown in Figures 31 through 34. The vehicle trajectory and final position are shown in Figure 35.

Table 4. Sequential Description of Impact Events, Test No. HP34-1

| Time (sec) | Event |
|---|---|
| 0.000 | Vehicle's front bumper contacted barrier 95⅛ in. upstream from the upstream face of post no. 7 and was crushed inward. Vehicle's right headlight contacted barrier and shattered. |
| 0.008 | Vehicle's right-front tire contacted barrier. Vehicle's right fender contacted barrier and was crushed throughout. |
| 0.018 | Vehicle's grille contacted barrier. |
| 0.031 | Vehicle yawed away from barrier. Vehicle rolled toward barrier. |
| 0.040 | Vehicle's hood contacted handrail and deformed. Vehicle's right-front door contacted barrier and deformed. |
| 0.052 | Vehicle's grille disengaged. |
| 0.060 | Top of vehicle's right-side doors bent away from vehicle frame. |
| 0.067 | Vehicle's windshield cracked. |
| 0.075 | Vehicle rolled toward barrier. |
| 0.088 | Vehicle's left-front tire became airborne. |
| 0.124 | Vehicle's right-front door window shattered. |
| 0.146 | Vehicle's right-rear door contacted barrier and deformed. |
| 0.170 | Vehicle's right quarter panel contacted barrier and deformed. |
| 0.182 | Vehicle's right taillight contacted barrier. Vehicle was parallel to system at a speed of 47.8 mph. |
| 0.188 | Vehicle's rear bumper contacted barrier and right corner crushed inward. |
| 0.194 | Vehicle's right taillight shattered. Vehicle's right-rear tire contacted barrier. |
| 0.216 | Vehicle pitched downward. |
| 0.260 | Vehicle's right headlight disengaged. |
| 0.300 | Vehicle's right-front tire deflated. |
| 0.362 | Vehicle exited system at a speed of 45.8 mph and an angle of 4.7 degrees. |
| 0.448 | Vehicle rolled away from barrier. |
| 0.486 | Vehicle's right-front wheel rim fractured. |
| 0.567 | Vehicle's left-front tire contacted ground. |
| 0.752 | Vehicle yawed toward barrier. |
| 1.675 | Vehicle's right-front tire rotated inward. |
| 4.475 | Vehicle came to rest. |

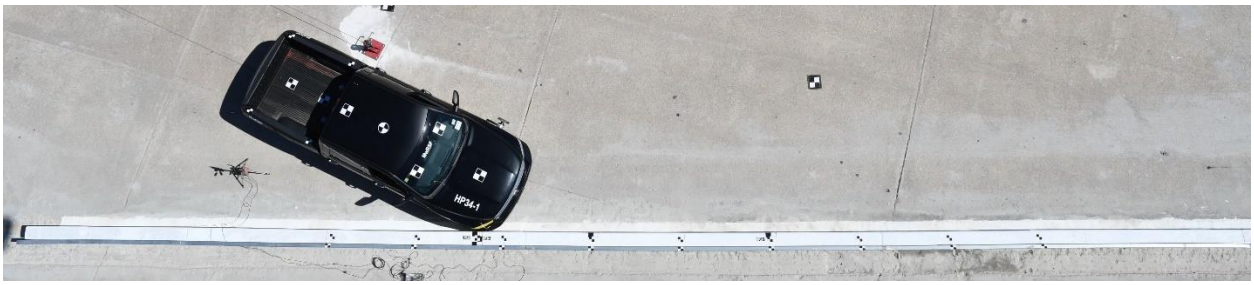

Figure 28. Impact Location, Test No. HP34-1

0.000 sec

0.050 sec

0.100 sec

0.200 sec

0.300 sec

0.400 sec

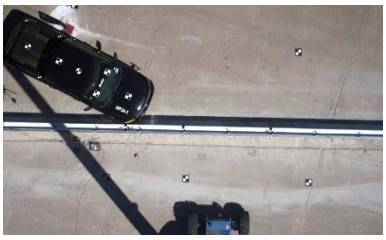
0.000 sec

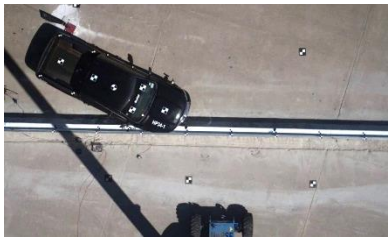
0.050 sec

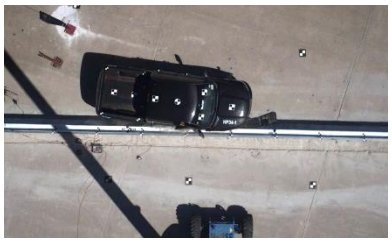
0.100

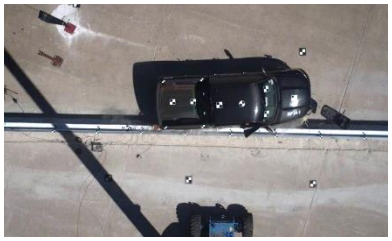
0.200 sec

0.300 sec

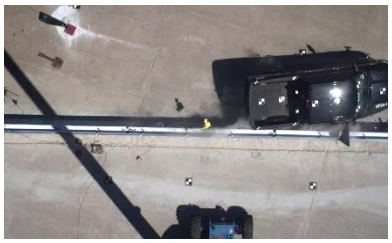
0.400 sec

Figure 29. Sequential Photographs, Test No. HP34-1

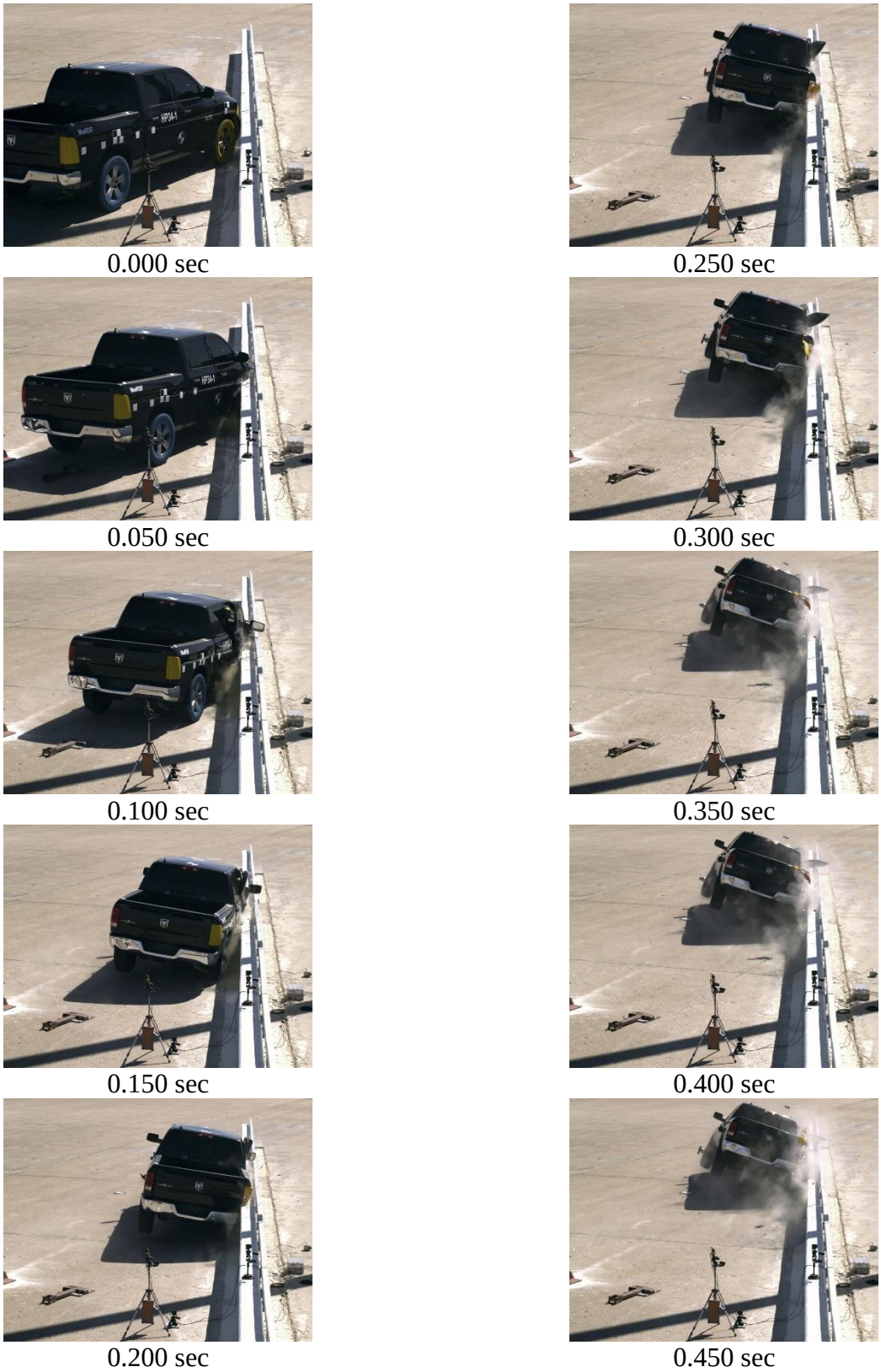


Figure 30. Sequential Photographs, Test No. HP34-1

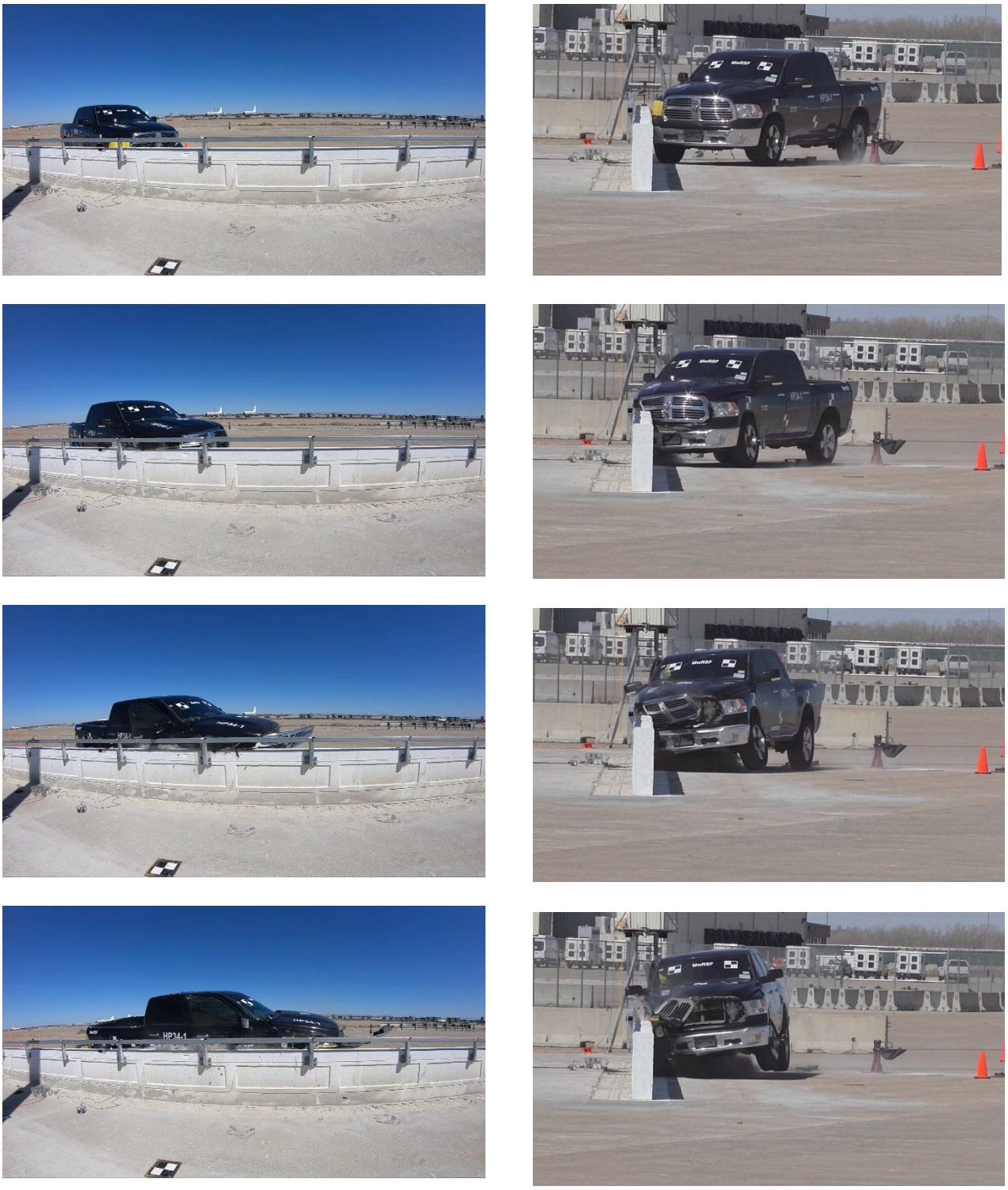

Figure 31. Documentary Photographs, Test No. HP34-1

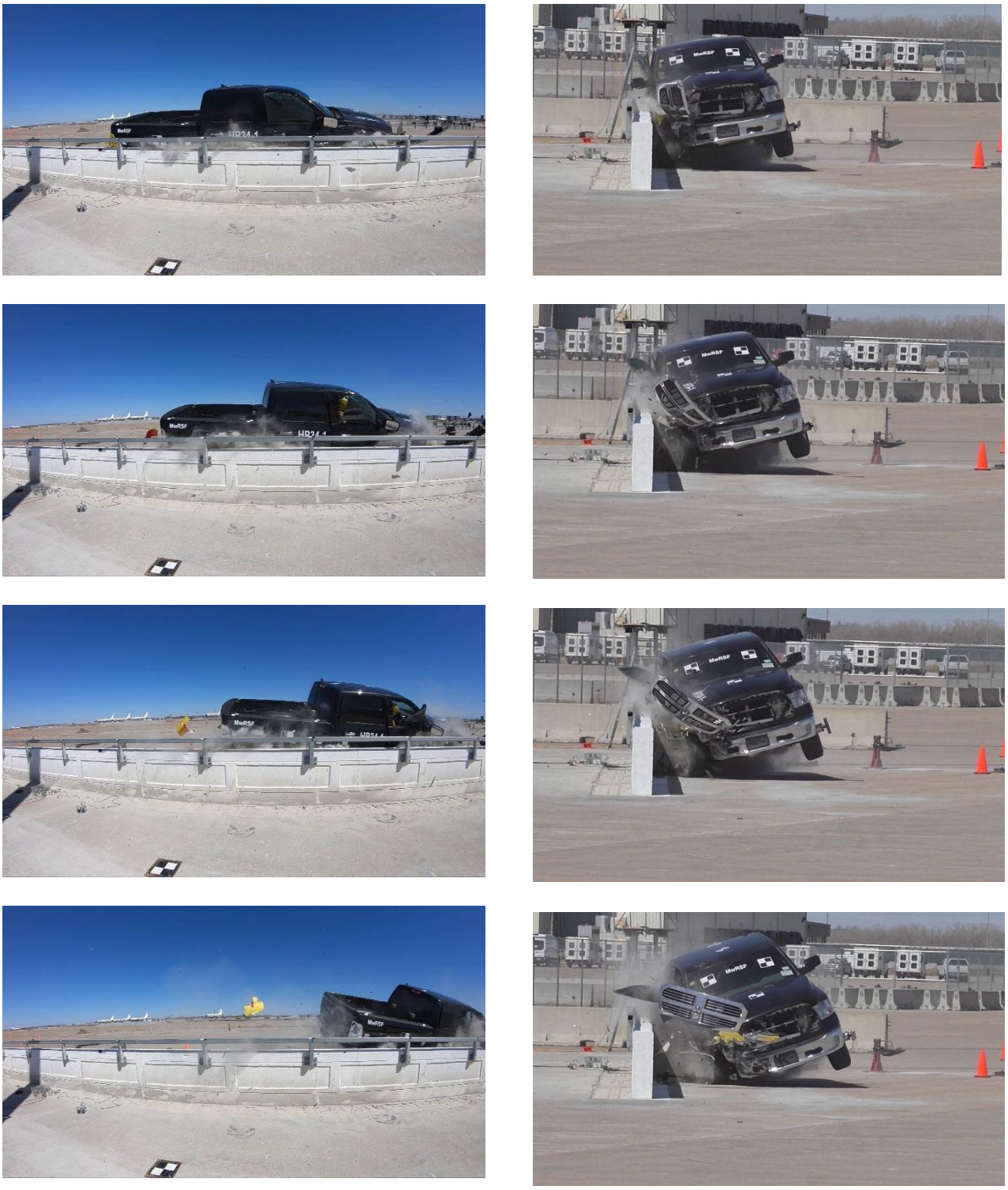

Figure 32. Documentary Photographs, Test No. HP34-1

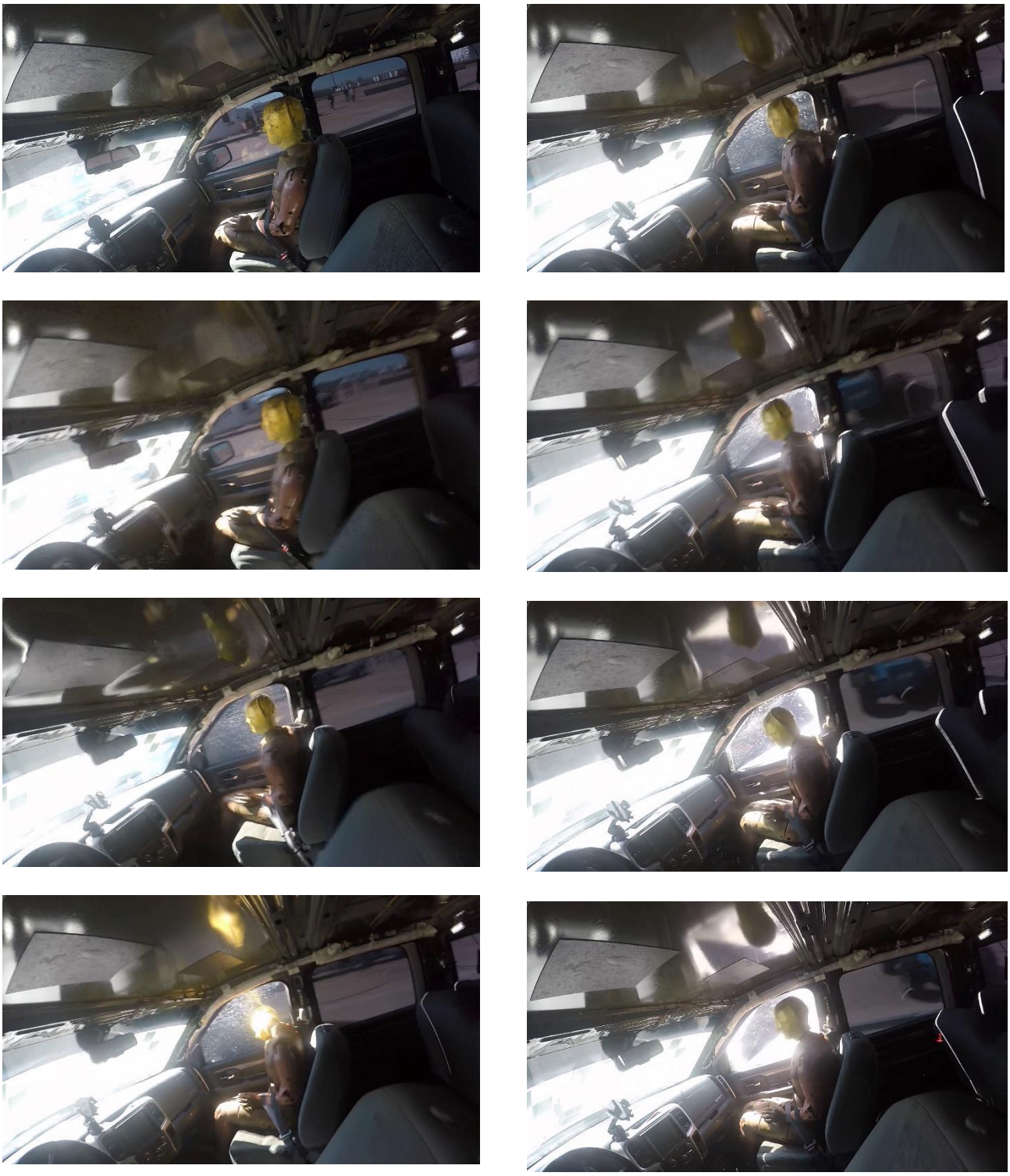

Figure 33. Documentary Photographs, Test No. HP34-1

Figure 34. Documentary Photographs, Test No. HP34-1

Figure 35. Vehicle Final Position and Trajectory Marks, Test No. HP34-1

## 5.3 Barrier Damage

Damage to the barrier was minimal, as shown in Figures 36 through 39. Barrier damage consisted of contact marks on the front face of the concrete segments, spalling of the concrete, and concrete cracking. The length of vehicle contact along the barrier was approximately 12 ft – 9 in., which started from 95⅛ in. upstream from the upstream side of post no. 7 to approximately 8 in. upstream from the upstream face of post no. 8.

Tire marks were visible on barrier segment nos. 2 and 3. The top, impact-side edge of the expansion joint no. 2 was chipped on barrier segments no. 2 and 3, resulting in a 3-in. tall, 5-in. wide, and 6-in. deep crack on barrier segment no. 2 at the downstream expansion joint. Narrow vertical cracking was observed on the front face of the second and third barrier segments at the expansion joint, where limited spalling and chipping occurred between 10 and 24 in. above the ground line. Vertical cracks measuring ¼ in. wide or less and measuring 5 in. and 25 in. long were found on the downstream side of barrier segment no. 2, and a 34-in. long hairline crack extended from the expansion joint at a 45-degree angle into barrier segment no. 3. A 30-in. long, hairline horizontal crack was observed at the groundline of barrier segment no. 3, extending downstream from the upstream expansion joint. On the back side of barrier, a 31½-in. long, hairline crack was observed on the downstream side of barrier segment no. 2.

Multiple gouges were observed on the barrier, concentrated at the expansion joint. For barrier segment no. 2, gouges measuring 4¾ in., 18½ in., and 3 in. long were located at 13, 24, and 34 in. above the tarmac, respectively, extending upstream from the expansion joint. For barrier segment no. 3, gouges measuring 13¾ in., 5¾ in., and 14 in. long were located at 8½ in., 11 in., and 13¾ in. above the tarmac, respectively. Gouges were less than 1 in. deep. Minor contact marks were observed on the upstream face of post no. 7, extending approximately 1 in. laterally and 2 in. vertically, as shown in Figure 38.

Figure 36. System Damage, Test No. HP34-1

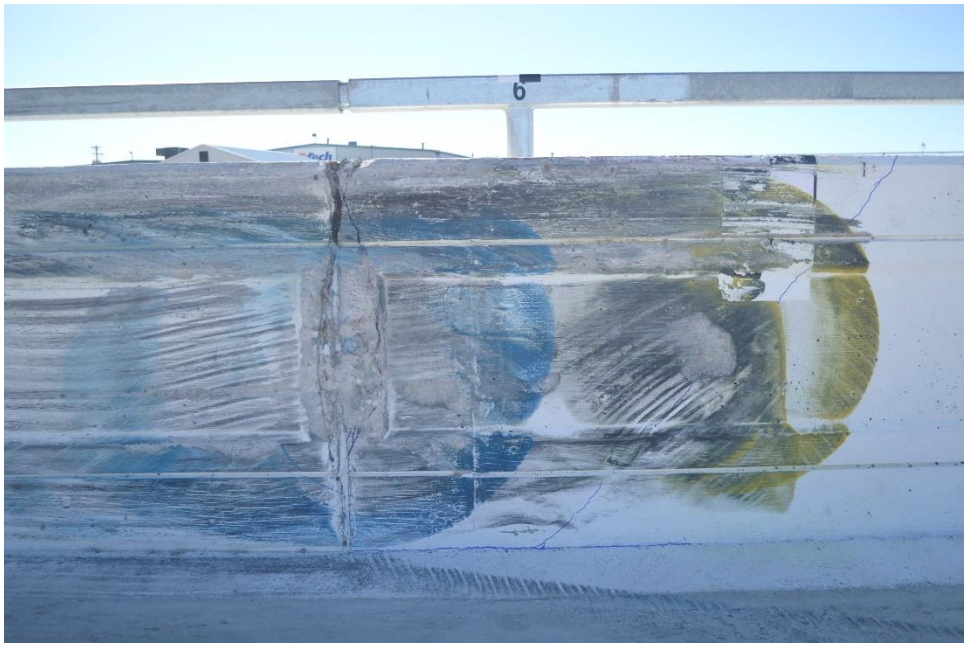

Figure 37. System Damage, Test No. HP34-1

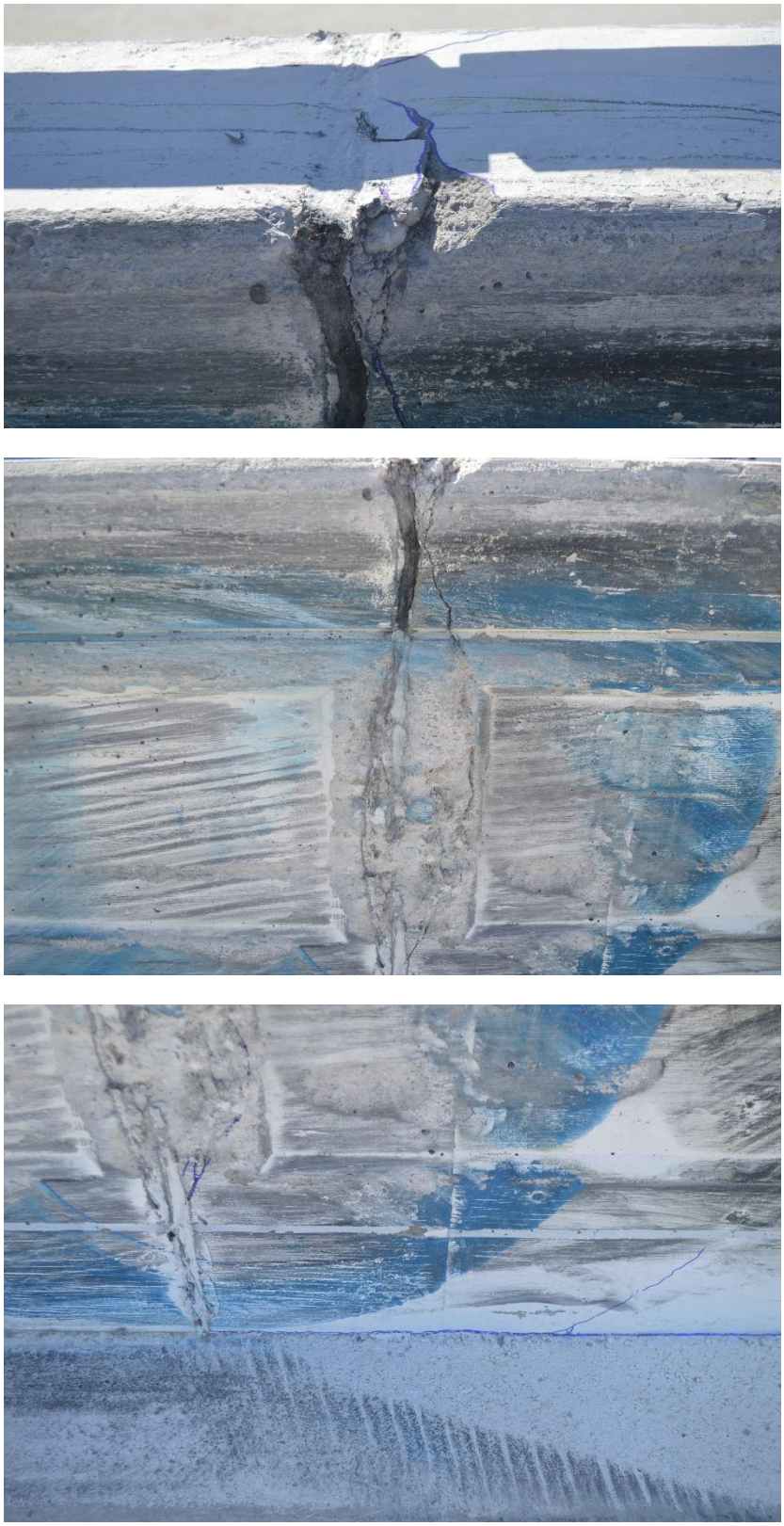

Figure 38. Cracking and Barrier Damage at Expansion Joint No. 2, Test No. HP34-1

Figure 39. Barrier Top Surface Damage and Post No. 7 Contact, Test No. HP34-1

A 0.9-in. permanent set was recorded for the HDOT 34-in. Tall, Aesthetic Concrete Bridge Rail with Pedestrian Handrail system. The maximum lateral dynamic barrier deflection, including tipping of the barrier along the top surface, was 1.2 in. at the downstream end of barrier no. 2, as determined from high-speed digital video analysis. The working width of the system was found to be 14.4 in., also determined from high-speed digital video analysis. A schematic of the permanent set deflection, dynamic deflection, and working width is shown in Figure 40.

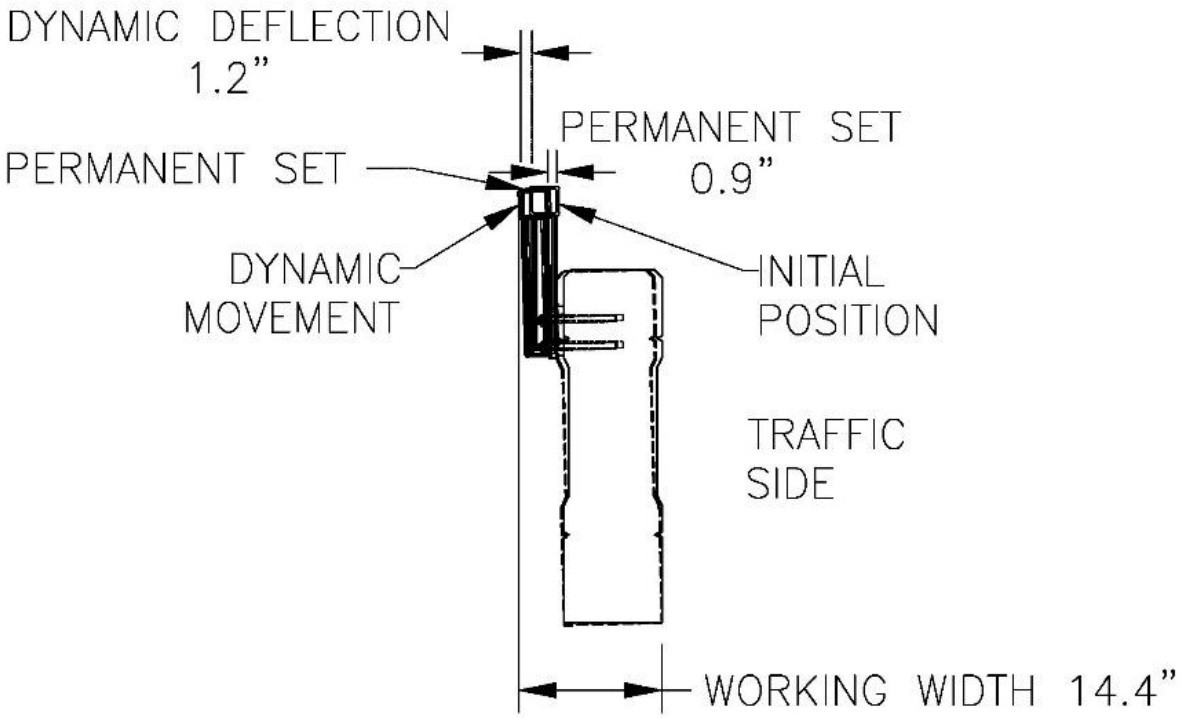


Figure 40. Permanent Set Deflection, Dynamic Deflection, and Working Width, Test No. HP34-1

## 5.4 Vehicle Damage

The damage to the vehicle was moderate, as shown in Figures 41 through 44. The maximum occupant compartment deformations are listed in Table 5 along with the intrusion limits established in MASH 2016 for various areas of the occupant compartment. Complete occupant compartment and vehicle deformations and the corresponding locations are provided in Appendix C. MASH 2016 defines intrusion or deformation as the occupant compartment being deformed and reduced in size with no observed penetration. There were no penetrations into the occupant compartment and none of the established MASH 2016 deformation limits were violated. Outward deformations, which are denoted as negative numbers in Appendix C, are not considered crush toward the occupant, and are not evaluated by MASH 2016 criteria.

Table 5. Maximum Occupant Compartment Deformations by Location

| Location | Maximum Intrusion in. | MASH 2016 Allowable Intrusion in. |
|---|---|---|
| Wheel Well & Toe Pan | 4.1 | ≤ 9 |
| Floor Pan & Transmission Tunnel | 0.4 | ≤ 12 |
| A- and B-Pillars | 0.1 | ≤ 5 |
| A- and B-Pillars (Lateral) | 0.0* | ≤ 3 |
| Side Front Panel (in Front of A-Pillar) | 2.7 | ≤ 5 |
| Side Door (Above Seat) | 0.0* | ≤ 3 |
| Side Door (Below Seat) | 0.1 | ≤ 12 |
| Roof | 0.0 | ≤ 9 |
| Windshield | 0.0 | ≤ 12 |
| Side Window | Shattered due to impact loading to door | No shattering resulting from contact with structural member of test article |
| Dash | 0.7 | N/A |

N/A – No MASH 2016 criteria exist for this location.
*Negative value reported as 0.0. See Appendix C for further information.

The majority of the damage was concentrated on the right-front corner and right side of the vehicle where the impact occurred. The right-front bumper corner was crushed inward, and the right-front headlight assembly was damaged and disengaged. The grill was disengaged. The right-rear bumper corner was crushed inward toward the centerline of the vehicle. The right-front fender, right door, and right-side box panels were dented and crushed along the entire length at a height corresponding to the top, impact-side edge of the parapet. The right-side door frame was bent and disengaged from the cab at the top seam, and the right-front windowpane was shattered and disengaged. The windshield was cracked, extending from the windshield wiper connection, but cracking was limited. The roof and remaining window glass remained undamaged.

The right-rear tire was deflated, and the right-front wheel assembly was fractured through the cast aluminum rim, as shown in Figure 42. Three of the five spokes of the rim were fractured, and the tire was removed from the vehicle. The anti-roll bar mounts on left and right sides of the vehicle were bent. Both left and right longitudinal chassis rails were bent laterally, and the lateral engine cradle support was buckled downward at the vehicle centerline. The right-side tie rod was bent at the connection to the spindle assembly. The left- and right-side lower engine mounts were fractured and partially disengaged from the frame. The right-side exhaust tube was fractured at the connection to the catalytic converter.

Figure 41. Vehicle Damage, Test No. HP34-1

Figure 42. Vehicle Damage, Test No. HP34-1

Figure 43. Vehicle Interior Damage, Test No. HP34-1

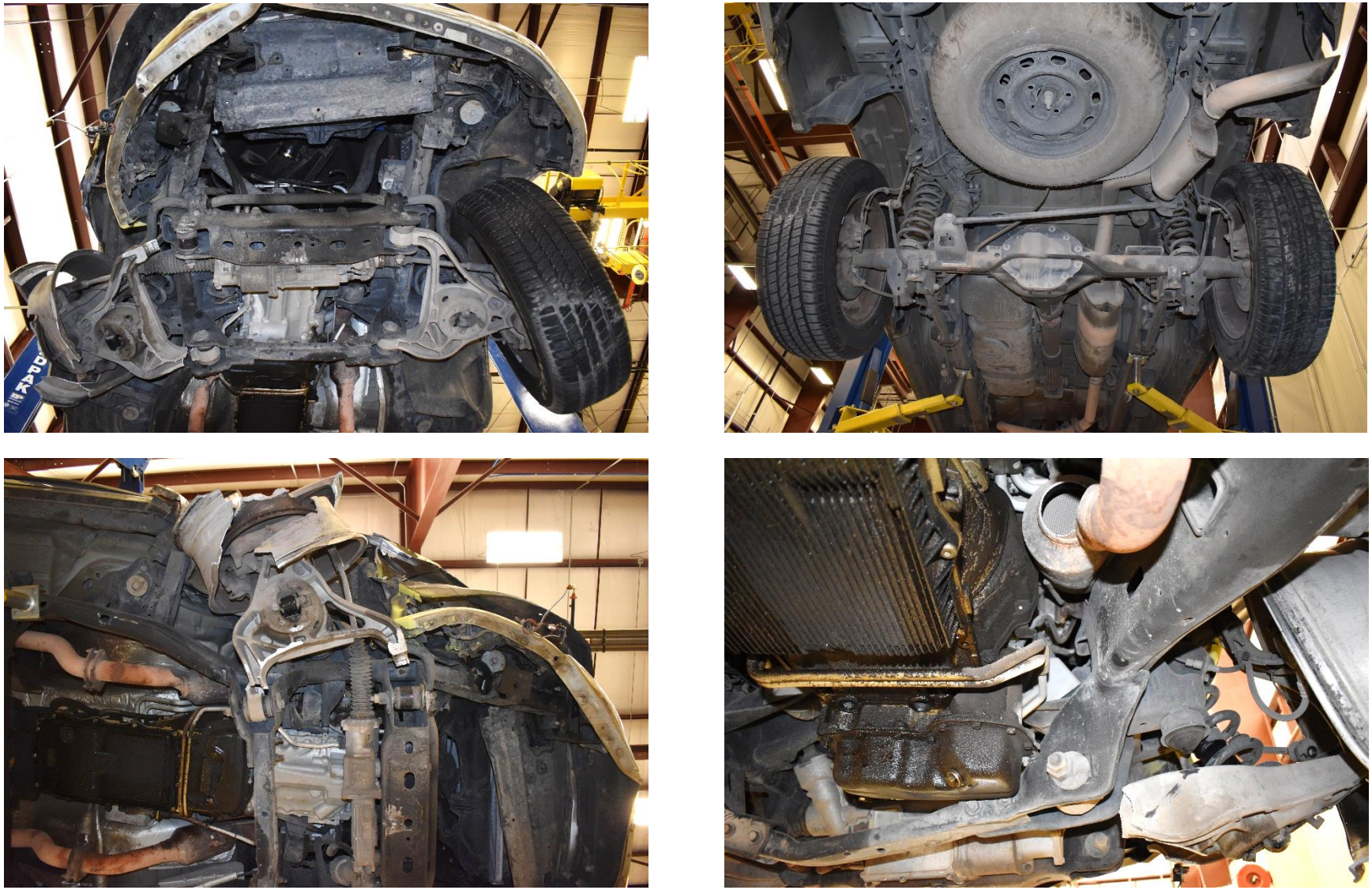

Figure 44. Vehicle Undercarriage Damage, Test No. HP34-1

## 5.5 Occupant Risk

The calculated occupant impact velocities (OIVs) and maximum 0.010-sec average occupant ridedown accelerations (ORAs) in both the longitudinal and lateral directions are shown in Table 6. Note that the OIVs and ORAs were within suggested limits, as provided in MASH 2016. The calculated THIV, PHD, and ASI values are also shown in Table 6. The results of the occupant risk analysis, as determined from the accelerometer data, are summarized in Figure 46. The recorded data from the accelerometers and the rate transducers are shown graphically in Appendix D.

Table 6. Summary of OIV, ORA, THIV, PHD, and ASI Values, Test No. HP34-1

| Evaluation Criteria | | Transducer | | MASH 2016 Limits |
|---|---|---|---|---|
| | | SLICE-1 | SLICE-2 (primary) | |
| OIV ft/s | Longitudinal | -19.10 | -19.41 | ±40 |
| | Lateral | -24.39 | -26.89 | ±40 |
| ORA g's | Longitudinal | -3.88 | -4.10 | ±20.49 |
| | Lateral | -13.59 | -12.44 | ±20.49 |
| Maximum Angular Displacement degrees | Roll | 21.9 | 19.4 | ±75 |
| | Pitch | 5.7 | 6.4 | ±75 |
| | Yaw | 37.4 | 36.8 | not required |
| THIV ft/s | | 9.65 | 10.18 | not required |
| PHD g's | | 14.10 | 13.03 | not required |
| ASI | | 1.68 | 1.80 | not required |

## 5.6 Barrier Loads

The longitudinal and lateral vehicle accelerations, as measured at the vehicle's c.g., were also processed using a SAE CFC-60 filter and a 50-msec moving average. The 50-msec moving average vehicle accelerations were then combined with the uncoupled yaw angle versus time data in order to estimate the vehicular loading applied to the barrier system. From the data analysis, the perpendicular impact forces were determined for the bridge rail, as shown in Figure 45. The maximum perpendicular (i.e., lateral) loads imparted to the barrier were 85.3 kips, as determined by the SLICE-2 (primary) unit.

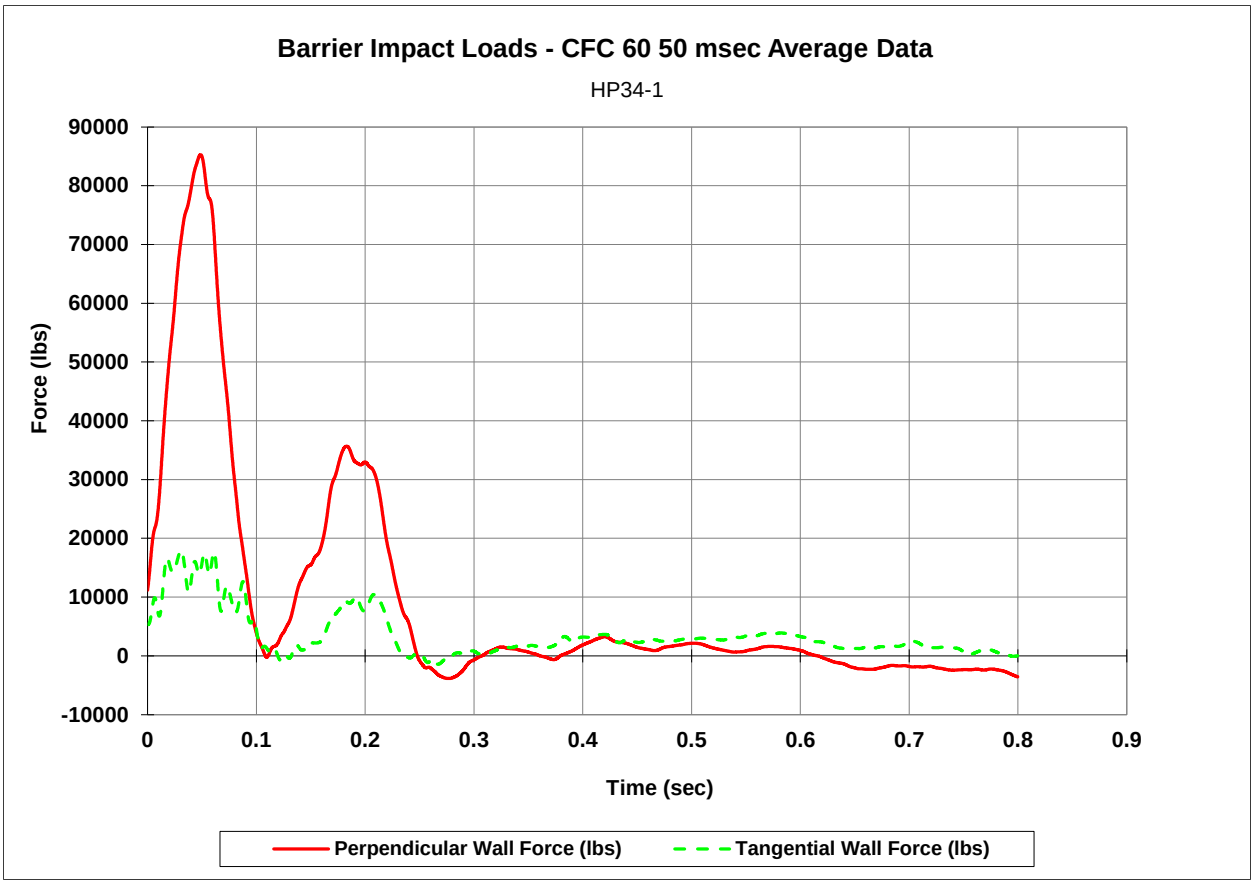


Figure 45. Perpendicular and Tangential Forces Imparted to the Barrier System (SLICE-2, Primary) Located at c.g., Test No. HP34-1

## 5.7 Discussion

The analysis of the test results for test no. HP34-1 showed that the system adequately contained and redirected the 2270P vehicle with controlled lateral displacements of the barrier. A summary of the test results and sequential photographs are shown in Figure 46. Detached elements, fragments, or other debris from the test article did not penetrate or show potential for penetrating the occupant compartment, or present an undue hazard to other traffic, pedestrians, or work-zone personnel. Deformations of, or intrusions into, the occupant compartment that could have caused serious injury did not occur. The test vehicle did not penetrate nor ride over the barrier and remained upright during and after the collision. Vehicle roll, pitch, and yaw angular displacements, as shown in Appendix D, were deemed acceptable, because they did not adversely influence occupant risk nor cause rollover. After impact, the vehicle exited the barrier at an angle of 4.7 degrees, and its trajectory did not violate the bounds of the exit box. Therefore, test no. HP34-1 was determined to be acceptable according to the MASH 2016 safety performance criteria for test designation no. 3-11.

0.000 sec 0.100 sec 0.200 sec 0.300 sec 0.400 sec

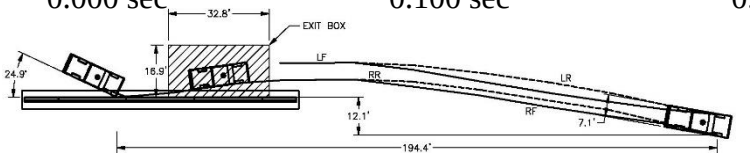


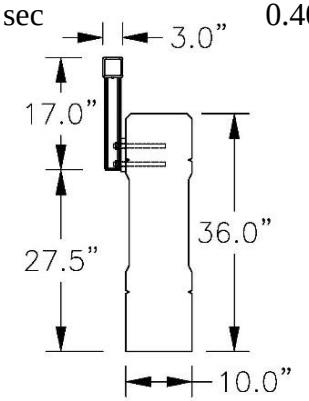


- Test Agency ..... MwRSF
- Test Number ..... HP34-1
- Date ..... March 25, 2022
- MASH 2016 Test Designation No. ..... 3-11
- Test Article.... Hawaii 34-in. Tall, Aesthetic Concrete Bridge Rail with Pedestrian Handrail
- Total Length ..... 88 ft
- Key Component – Barrier Segment
  - Length ..... 22 ft
  - Depth ..... 10 in.
  - Height (measured from tarmac) ..... 34 in.
- Key Component – Pedestrian Handrail
  - Post ..... 7-in. long HSS2½x2½x¼
  - Rail ..... 21-ft 11-in. long HSS3x3x¼
  - Base plate ..... 8-in. x 5-in. x ¾-in. plate
  - Anchor ..... ⅝-11 UNC x 7⅞ in. long
- Type of Support Surface ..... Concrete Tarmac
  - Anchor ..... Vertical rebar anchored to concrete tarmac and epoxied
- Vehicle Make /Model ..... 2016 Dodge Ram 1500 crew cab
  - Curb ..... 5,117 lb
  - Test Inertial ..... 5,002 lb (MASH 2016 Limit 5,000 ± 110 lb)
  - Gross Static ..... 5,161 lb
- Impact Conditions
  - Speed ..... 62.2 mph (MASH 2016 Limit 62 ± 2.5 mph)
  - Angle ..... 24.9 degrees (MASH 2016 Limit 25 ± 1.5 degrees)
  - Impact Location ..... 95 in. upstream from the upstream face of post no. 7
- Impact Severity ..... 114.7 kip-ft > 105.6 kip-ft limit from MASH 2016
- Exit Conditions
  - Speed ..... 45.8 mph
  - Angle ..... 4.7 degrees
- Exit Box Criterion ..... Pass
- Vehicle Stability ..... Satisfactory
- Vehicle Stopping Distance ..... 194.4 ft downstream, 12.1 ft laterally in front
- Vehicle Damage ..... Moderate
  - VDS [8] ..... 1-RFQ-5
  - CDC [9] ..... 01-FREK-3
  - Maximum Interior Deformation ..... 4.1 in.
- Test Article Damage ..... Minimal
- Maximum Test Article Deflections
  - Permanent Set ..... 0.9 in.
  - Dynamic Deflection ..... 1.2 in.
  - Working Width ..... 14.4 in.
- Transducer Data

| Evaluation Criteria | | Transducer | | MASH 2016 Limit |
|---|---|---|---|---|
| | | SLICE-1 | SLICE-2 (primary) | |
| OIV ft/s | Longitudinal | -19.10 | -19.41 | ±40 |
| | Lateral | -24.39 | -26.89 | ±40 |
| ORA g's | Longitudinal | -3.88 | -4.10 | ±20.49 |
| | Lateral | -13.59 | -12.44 | ±20.49 |
| MAX ANGULAR DISP. degrees | Roll | 21.9 | 19.4 | ±75 |
| | Pitch | 5.7 | 6.4 | ±75 |
| | Yaw | 37.4 | 36.8 | Not required |
| THIV – ft/s | | 9.65 | 10.18 | Not required |
| PHD – g's | | 14.10 | 13.03 | Not required |
| ASI | | 1.68 | 1.80 | Not required |

Figure 46. Summary of Test Results and Sequential Photographs, Test No. HP34-1

# 6 SUMMARY AND CONCLUSIONS

Test no. HP34-1 was conducted on a 34-in. Tall, Aesthetic Concrete Bridge Rail with Pedestrian Handrail system according to MASH 2016 test designation no. 3-11. A summary of the test evaluation is shown in Table 7.

In test no. HP34-1, the 5,002-lb pickup truck impacted the 34-in. Tall, Aesthetic Concrete Bridge Rail with Pedestrian Handrail system at a speed of 62.2 mph and an angle of 24.9 degrees. The target impact location was 85 in. upstream from the face of a vertical post in the pedestrian handrail system to maximize the propensity for the vehicle to snag on the handrail, which was located within the vehicle's ZOI. The actual impact point was 10⅛ in. upstream from the target impact point. The test impact severity was 114.7 kip-ft. The test vehicle was parallel with the barrier system at 0.182 sec traveling at 47.8 mph. At 0.362 sec after impacting the barrier system, the vehicle exited the system at a speed of 45.8 mph and an angle of 4.7 degrees. The vehicle was successfully contained and smoothly redirected with moderate damage to both the barrier system and the vehicle. All vehicle decelerations, ORAs, and OIVs fell within the recommended safety limits established in MASH 2016. Therefore, test no. HP34-1 was successful according to the safety criteria of MASH 2016 test designation no. 3-11.

MASH Test Designation 3-10, which consists of an 1100C impacting at 62 mph and 25 degrees, was not deemed necessary for this research effort. Previous full-scale crash testing performed on HDOT's 34-in. tall, Aesthetic Concrete Bridge Rail was performed according to MASH Test Designations 3-10 and 3-11 [1]. During test no. H34BR-1, the small car vehicle was smoothly redirected by the bridge rail. The largest lateral extension of a structurally-stiff part of the vehicle, including the hood, was 9.6 in., which is less than the width of the bridge rail and not wide enough to contact the posts of the pedestrian handrail, which were offset from the impact-side traffic face by 10¾ in. A summary of test H34BR-1 was included in Table 7. Furthermore, recent testing was performed on the HDOT's 34-in. tall, Aesthetic Concrete Bridge Rail with Sidewalk and Pedestrian Handrail according to MASH Test Designations 3-10 and 3-11 [3]. After traversing the curb, the 1100C test vehicle impacted the bridge rail at a slight elevation and roll angle. The vehicle's hood was above the top of the rail at the time of impact. Despite the modified impact condition, the vehicle did not engage with the back side-mounted pedestrian handrail system. Based on the results of these two tests, MASH Test Designation 3-10 was not performed on the HDOT's 34-in. tall, Aesthetic Concrete Bridge Rail with Pedestrian Handrail. Therefore, the system tested herein was deemed crashworthy according to MASH TL-3 safety performance criteria.

Table 7. Summary of Safety Performance Evaluation

| Evaluation Factors | Evaluation Criteria | Test No. HP34-1 | Test No. H34BR-1 (without handrail) [1] |
|---|---|---|---|
| Structural Adequacy | A. Test article should contain and redirect the vehicle or bring the vehicle to a controlled stop; the vehicle should not penetrate, underride, or override the installation although controlled lateral deflection of the test article is acceptable. | S | S |
| Occupant Risk | D. 1. Detached elements, fragments or other debris from the test article should not penetrate or show potential for penetrating the occupant compartment, or present an undue hazard to other traffic, pedestrians, or personnel in a work zone. | S | S |
| | 2. Deformations of, or intrusions into, the occupant compartment should not exceed limits set forth in Section 5.2.2 and Appendix E of MASH 2016. | S | S |
| | F. The vehicle should remain upright during and after collision. The maximum roll and pitch angles are not to exceed 75 degrees. | S | S |
| | H. Occupant Impact Velocity (OIV) (see Appendix A, Section A5.2.2 of MASH 2016 for calculation procedure) should satisfy the following limits: | S | S |
| | Occupant Impact Velocity Limits | | |
| | Component: Longitudinal and Lateral | Preferred: 30 ft/s | Maximum: 40 ft/s |
| | I. The Occupant Ridedown Acceleration (ORA) (see Appendix A, Section A5.2.2 of MASH 2016 for calculation procedure) should satisfy the following limits: | S | S |
| | Occupant Ridedown Acceleration Limits | | |
| | Component: Longitudinal and Lateral | Preferred: 15.0 g's | Maximum: 20.49 g's |
| MASH 2016 Test Designation No. | | 3-11 | 3-10 |
| Final Evaluation (Pass or Fail) | | Pass | Pass |
| Estimated Maximum ZOI (in.) | | 11¾ | 9.6 |

S – Satisfactory U – Unsatisfactory NA - Not Applicable

# 7 MASH IMPLEMENTATION

According to TL-3 evaluation criteria in MASH 2016, two tests are required for evaluation of longitudinal barrier systems: (1) test designation no. 3-10 with an 1100C small car and (2) test designation no. 3-11 with a 2270P pickup truck. However, only the 2270P crash test was deemed necessary as other prior small car tests were used to deem the 1100C crash test non-critical.

The 34-in. Tall, Aesthetic Concrete Bridge Rail with Pedestrian Handrail system, which was evaluated in this research study, was similar to other systems that were subjected to MASH full-scale crash testing. One bridge rail configuration was evaluated without a pedestrian handrail and used a 34-in. nominal top rail height [1]. A second configuration with handrail and a 34-in. nominal top rail height above a 6-in. tall, 6-ft wide curb [3] was evaluated. For both of these auxiliary systems, both MASH test designation nos. 3-10 and 3-11 were successfully performed. Based on the results of MASH test designation no. 3-10 performed on the 34-in. tall, aesthetic concrete bridge rail without pedestrian handrail, it was not anticipated that any portion of the 1100C small car would extend past the concrete barrier and interact with the pedestrian handrail system. The maximum lateral ZOI of the small car test vehicle during test no. H34BR-1 was 9.6 in., which is less than the width of the concrete bridge rail and therefore would not interact with the posts of the back side-mounted pedestrian handrail, which were offset by 10¾ in. Therefore, results from test no. H34BR-1 were used to justify not conducting another MASH test designation no. 3-10 on the HDOT 34-in. Tall, Aesthetic Concrete Bridge Rail with Pedestrian Handrail system. This decision was further supported during test no. HP34S-2, in which the 1100C did not interact with the pedestrian handrail after climbing the curb and vaulting into the air.

Each crashworthy bridge rail system should be connected to crashworthy transition hardware when the bridge rail is located within the clear zone. An example of a transition which was successfully evaluated according to MASH criteria, which could be successfully implemented with the 34-in. Tall, Aesthetic Concrete Bridge Rail, consisted of a thrie beam with curb and vertical buttress [10].

Figure 47. HDOT Thrie Beam Approach Guardrail Transition [10]

# 8 REFERENCES

1. Bielenberg, R.W., Yoo, S., Faller, R.K., and Urbank, E.L., *Crash Testing and Evaluation of the HDOT 34-in. Tall Aesthetic Concrete Bridge Rail: MASH Test Designation Nos. 3-10 and 3-11*, MwRSF Report No. TRP-03-420-19, Final Report to the Hawaii Department of Transportation, Midwest Roadside Safety Facility, University of Nebraska-Lincoln, Lincoln, Nebraska, October 2019.

2. FHWA Eligibility Letter No. HSST-1/B-345, August 14, 2020. https://safety.fhwa.dot.gov/roadway_dept/countermeasures/reduce_crash_severity/barriers/pdf/b345.pdf

3. Perry, B.J., Stolle, C.S., Faller, R.K., and Urbank, E.L., *Crash Testing and Evaluation of the HDOT 34-in. Tall, Aesthetic Concrete Bridge Rail with Pedestrian Handrail and Sidewalk: MASH Test Designation Nos. 3-10 and 3-11*, MwRSF Report No. TRP-03-456-22, Draft Report to the Hawaii Department of Transportation, Midwest Roadside Safety Facility, University of Nebraska-Lincoln, Lincoln, Nebraska, Draft Report in Progress.

4. *Manual for Assessing Safety Hardware*, *Second Edition*, American Association of State Highway and Transportation Officials (AASHTO), Washington, D.C., 2016.

5. Hinch, J., Yang, T.L., and Owings, R., *Guidance Systems for Vehicle Testing*, ENSCO, Inc., Springfield, Virginia, 1986.

6. *Center of Gravity Test Code - SAE J874 March 1981*, SAE Handbook Vol. 4, Society of Automotive Engineers, Inc., Warrendale, Pennsylvania, 1986.

7. Society of Automotive Engineers (SAE), *Instrumentation for Impact Test – Part 1 – Electronic Instrumentation*, SAE J211/1 MAR95, New York City, NY, July, 2007.

8. *Vehicle Damage Scale for Traffic Investigators*, Second Edition, Technical Bulletin No. 1, Traffic Accident Data (TAD) Project, National Safety Council, Chicago, Illinois, 1971.

9. *Collision Deformation Classification – Recommended Practice J224 March 1980*, Handbook Volume 4, Society of Automotive Engineers (SAE), Warrendale, Pennsylvania, 1985.

10. Rosenbaugh, S.K., Hovde, S.E., Faller, R.K., and Urbank, E.L., *Crash Testing and Evaluation of the Hawaii Thrie Beam Approach Guardrail Transition: MASH Test Nos. 3-20 and 3-21*, Draft Report in Progress to the Hawaii Department of Transportation, MwRSF Report No. TRP-03-425-20, Midwest Roadside Safety Facility, University of Nebraska-Lincoln, Lincoln, Nebraska, March 20, 2020.

# 9 APPENDICES

# Appendix A. Material Specifications

Table A-1. Bill of Materials, Test No. HP34-1

| Item No. | Description | Material Specification | References |
|---|---|---|---|
| a1 | Concrete | Min. f'c = 4,000 psi | Ticket#2025733, Project #00110546.00 |
| a2 | Low-Strength Concrete Overlay | Concrete NE Mix 9019 CITY | N/A |
| b1 | #5 Rebar, 46¾" Total Unbent Length | ASTM A615 Gr. 60 | H#3600014153 |
| b2 | #5 Rebar, 38⅞" Total Unbent Length | ASTM A615 Gr. 60 | H#3600014153 |
| b3 | #5 Rebar, 259½" Total Length | ASTM A615 Gr. 60 | H#3600014153 |
| b4 | #5 Rebar, 127¾" Total Length | ASTM A615 Gr. 60 | H#3600014153 |
| c1 | #8 Smooth Rebar, 24½" Total Length | ASTM A615 Gr. 60 | H#256801 |
| c2 | 1¼" Dia. PVC Pipe | Schedule 80 PVC Gr. 12454 | COC P#0472040 |
| c3 | 1¼" Dia. PVC End Cap | Schedule 80 PVC Gr. 12454 | COC P#0470592 |
| c4 | Epoxy Adhesive | Hilti HIT RE-500 V3 | Hilti COC |
| c5 | Expansion Joint Filler | AASHTO M33, M153, or M213 | W.R. Meadows Seal Tight Fiber Expansion Joint that meets M213 Data Product Sheet |
| c6 | Expansion Joint Sealant | AASHTO M173, M282, M301, ASTM D3581, or ASTM D5893 | Pecora 301NS Specification Data Sheet |
| d1 | 8"x5"x¾" Steel Plate | ASTM A36 | H#21B2688-03 |
| d2 | HSS 2½"x2½"x¼", 13¾" Long | ASTM A500 Gr. B | H#98987D |
| d3 | HSS 3"x3"x¼", 131½" Long | ASTM A500 Gr. B | H#A018142 |
| d4 | HSS 3"x3"x¼", 263" Long | ASTM A500 Gr. B | H#A018142 |

| Item No. | Description | Material Specification | References |
|---|---|---|---|
| d5 | HSS 2"x2"x¼", 7" Long | ASTM A500 Gr. B | H#845848 |
| d6 | 2¼"x2¼"x¼" Steel Plate | ASTM A36 | H#A0J157 |
| d7 | ⅝"-11 UNC, 7⅞" Long Threaded Rod | ASTM F1554-15 Gr. 105 | H#10543730 |
| d8 | 7"x1½"x$^{3}/_{16}$" Shim | ASTM A36 | H#21013251 |
| e1 | ⅝"-11 UNC Heavy Hex Nut | ASTM A563-15 Grade DH (ASTM A194-2H used) | L#U74324-313003 Order#140137 |
| e2 | ⅝" Dia. Hardened Washer | ASTM F436 | H#107480 Order#140137 |

**Husker Concrete**
201 S 1st Street, Lincoln, NE 68508
Phone: (402) 438-2147

Customer's Signature: _____

| PLANT | TRUCK | DRIVER | CUSTOMER | PROJECT | TAX | PO NUMBER | DATE | TIME | TICKET |
|---|---|---|---|---|---|---|---|---|---|
| 11 | 2246 | 10880 | 62461 | | NTE | | 1/31/22 | 10:10 AM | 2025733 |

| Customer | Delivery Address | Special Instructions |
|---|---|---|
| UNL-MIDWEST ROADSIDE SAFETY | 4630 NW 36TH ST | NW 38TH ST & W CUMING ST & EASTTO NW 36TH ST & SOUTH |

| LOAD QUANTITY | CUMULATIVE QUANTITY | ORDERED QUANTITY | PRODUCT CODE | PRODUCT DESCRIPTION | UOM | UNIT PRICE | EXTENDED PRICE |
|---|---|---|---|---|---|---|---|
| 10.00 | 10.00 | 10.00 | QL3S4504 | LNK47B1S384000H | yd | $148.50 | $1,485.00 |
| | | | | WINTER SERVICE | | | $60.00 |

| Water Added On Job At Customer's Request: | SLUMP | Notes: | | |
|---|---|---|---|---|
| | 4.00 in | | TICKET SUBTOTAL | $1,545.00 |
| | | | SALES TAX | $0.00 |
| | | | TICKET TOTAL | **$1,545.00** |
| | | | PREVIOUS TOTAL | |
| | | | **GRAND TOTAL** | **$1,545.00** |

**CAUTION FRESH CONCRETE**
**KEEP CHILDREN AWAY**

Contains Portland cement. Freshly mixed cement, mortar, concrete or grout may cause skin injury. Avoid prolonged contact with skin. Always wear appropriate Personal Protective Equipment (PPE). In case of contact with eyes or skin, flush thoroughly with water. If irritation persists, seek medical attention promptly.

**Terms & Conditions**

This concrete is produced with the ASTM standard specifications for ready mix concrete. Strengths are based on a 3" slump. Drivers are not permitted to add water to the mix to exceed this slump, except under the authorization of the customer and their acceptance of any decrease in compressive strength and any risk of loss as a result thereof. Cylinder tests must be handled according to ACI/ASTM specifications and drawn by a licensed testing lab and/or certified technician.
Ready Mixed Concrete Company will not deliver any product beyond any curb lines unless expressly told to do so by customer and customer assumes all liability for any personal or property damage that may occur as a result of any such directive.
The purchaser's exceptions and claims shall be deemed waived unless made in writing within 3 days from time of delivery. In such a case, seller shall be given full opportunity to investigate any such claim. Seller's liability shall in no event exceed the purchase price of the materials against which any claims are made.

Figure A-1. Concrete, Test No. HP34-1 (Item No. a1)

benesch

Page 1 of 1

# Concrete Sample Test Report
## Cylinder Compressive Strength

| | |
|---|---|
| Project Name: | Midwest Roadside Safety - Misc Testing |
| Project Number: | 00110546.00 |
| Client: | Midwest Roadside Safety Facility |
| Location: | MNPD |
| Sample: | 048 |
| Description: | H34 A/B |

### Field Data (ASTM C172, C143, C173/C231, C138, C1064)

| | | Property | Test Result |
|---|---|---|---|
| Supplier: | | | |
| Mix Name: | | Slump (in): | |
| Ticket Number: | | Air Content (%): | |
| Truck Number: | | Unit Weight (lb/ft³): | |
| Load Volume (yd³): | | Air Temp (°F): | |
| Mold Date: | 01/31/2022 | Mix Temp (°F): | |
| Molded By: | | Min Temp (°F): | |
| Initial Cure Method: | | Max Temp (°F): | |

### Laboratory Test Data (ASTM C39)

| | | | | | | |
|---|---|---|---|---|---|---|
| Sample Number: | 048 | 048 | | | | |
| Set Number: | H34A | H34B | | | | |
| Specimen Number: | 1 | 1 | | | | |
| Age: | 21 | 21 | | | | |
| Length (in): | 12 | 12 | | | | |
| Diameter (in): | 6.01 | 6.02 | | | | |
| Area (in²): | 28.37 | 28.46 | | | | |
| Density (lb/ft³): | 137 | 137 | | | | |
| Test Date: | 02/21/2022 | 02/21/2022 | | | | |
| Break Type: | 5 | 5 | | | | |
| Max Load (lbf): | 155,885 | 163,513 | | | | |
| Strength (psi): | 5,490 | 5,740 | | | | |
| Spec Strength (psi): | 0 | 0 | | | | |
| Excl in Avg Strength: | ☐ | ☐ | ☐ | ☐ | ☐ | ☐ |

Remarks:
Average 21-day Compressive Strength (psi): **5,620**

Sample Receive Date: 02/21/2022

Approved by:

Matt Roessler

Matt Roessler Manager

Date: 02/21/2022

This report shall not be reproduced, except in full, without prior approval of Alfred Benesch & Company. Results relate only to items tested.

825 M Street Suite 100
Lincoln, NE 68508

Alfred Benesch & Company

Version 1 Created by Matt Roessler Manager (mroessler@benesch.com) on 02/21/2022 1:03 PM CST

https://forneytools.forneyvault.com/Report?id=d9292015-2811-4b34-9dc9-c22ec5100eaa

Figure A-2. 21-Day Concrete Material Strength, Test No. HP34-1 (Item No. a1)

NUCOR

**Mill Certification**
08/07/2020

MTR#:454621-1
Lot #:360001415320
ONE NUCOR WAY
BOURBONNAIS, IL 60914 US
815 937-3131
Fax: 815 939-5599

Sold To: SIMCOTE INC
1645 RED ROCK RD
ST PAUL, MN 55119 US

Ship To: SIMCOTE INC
1645 RED ROCK RD
ST PAUL, MN 55119 US

| | | | |
|---|---|---|---|
| Customer PO | MN-3748 | Sales Order # | 36013225 - 2.5 |
| Product Group | Rebar | Product # | 2110230 |
| Grade | A615 Gr 60/AASHTO M31 | Lot # | 360001415320 |
| Size | #5 | Heat # | 3600014153 |
| BOL # | BOL-550874 | Load # | 454621 |
| Description | Rebar #5/16mm A615 Gr 60/AASHTO M31 40' 0" [480"] 4001-8000 lbs | Customer Part # | |
| Production Date | 07/17/2020 | Qty Shipped LBS | 45060 |
| Product Country Of Origin | United States | Qty Shipped EA | 1080 |
| Original Item Description | | Original Item Number | |

I hereby certify that the material described herein has been manufactured in accordance with the specifications and standards listed above and that it satisfies those requirements.

Melt Country of Origin : United States  Melting Date: 07/14/2020

| C (%) | Mn (%) | P (%) | S (%) | Si (%) | Ni (%) | Cr (%) | Mo (%) | Cu (%) | V (%) | Nb (%) |
|---|---|---|---|---|---|---|---|---|---|---|
| 0.38 | 0.92 | 0.013 | 0.046 | 0.205 | 0.20 | 0.17 | 0.06 | 0.33 | 0.011 | 0.001 |

**Other Test Results**

Yield (PSI) : 68300  Tensile (PSI) : 105600  Average Deformation Height (IN) : 0.042

Elongation in 8" (%) : 12.6  Bend Test : Pass  Weight Percent Variance (%) : -3.50

**Comments:**

All manufacturing processes of the steel materials in this product, including melting, have occurred within the United States. Products produced are weld free. Mercury, in any form, has not been used in the production or testing of this material.

Zachary Sprintz, Chief Metallurgist

Page **1** of **1**

Figure A-3. #5 Rebar, Test No. HP34-1 (Item No. b1 through b4)

CMC Steel Texas

P. O. Box 911
Seguin, Texas 78156-0911
(830) 372-8200

CERTIFIED MILL TEST REPORT
*For additional copies call*
*(830) 372-8485*

We hereby certify that the test results presented here are accurate and conform to the reported grade.

Daniel J. Schacht
Quality Assurance Manager

| | | | |
|---|---|---|---|
| HEAT NO.: 256601<br>SECTION: RD 1x45'2"<br>RD 25.4mm x13.768<br>GRADE: ASTM A615-05a GRADE 60<br>ASTM A615M-05a GRADE 420 | SOLD TO: A B C COATING - TULSA<br>P O BOX 9693<br>TULSA, OK 74157- | SHIP TO: A B C COATING CO<br>2236 SOUTH YUKON AVE.<br>TULSA, OK 74107- | SHIP#: 102026/60<br>BOL #: 460684<br>INV #: 8000705606<br>CUST PO#:<br>CUST P/N: |

| CHEMICAL ANALYSIS | % |
|---|---|
| C | 0.28 |
| Mn | 1.26 |
| P | 0.018 |
| S | 0.031 |
| Si | 0.19 |
| Cu | 0.49 |
| Cr | 0.16 |
| Ni | 0.14 |
| Mo | 0.040 |
| Cb | 0.011 |
| V | 0.020 |
| Sn | 0.015 |
| B | 0.0004 |
| Ti | 0.001 |
| C.Eq. | 0.52 |

PROPERTIES

| MECHANICAL | TEST I IMPERIAL | TEST I METRIC | TEST IMPERIAL | TEST METRIC | TEST IMPERIAL | TEST METRIC |
|---|---|---|---|---|---|---|
| Yield Strength | 78.3 KSI | 539.9 MPA | | | | |
| Tensile Strength | 111.6 KSI | 769.5 MPA | | | | |
| Elongation | 18 % | 18 % | | | | |
| Gauge Length | 8 INS | 203 MM | | | | |
| Reduction of Area | | | | | | |
| Bend Test | OK | | | | | |
| Diameter | 7.90 INS | 200.41 MM | | | | |
| Charpy Impact | | | | | | |
| Test Temp | | | | | | |
| Sample Size | | | | | | |
| Orientation | | | | | | |
| Hardness | | | | | | |

JOMINY RESULTS - Rockwell C hardness at 1/16th inch increments

| 1 | 2 | 3 | 4 | 5 | 6 | 7 | 8 | 9 | 10 | 11 | 12 |
|---|---|---|---|---|---|---|---|---|---|---|---|
| | | | | | | | | | | | |
| 13 | 14 | 15 | 16 | 18 | 20 | 22 | 24 | 26 | 28 | 30 | 32 |
| | | | | | | | | | | | |

GRAIN SIZE
METHOD
RESULT

INCLUSION RATING

| METHOD | | | | |
|---|---|---|---|---|
| TYPE | | | | |
| SIZE | T H | T H | T H | T H |

100% MELTED AND MANUFACTURED IN THE USA AND FREE OF MERCURY CONTAMINATION IN THE PROCESS
REMARKS:

AASHTO M 31M/M 31-95

State of Texas, County of Guadalupe
Sworn to and subscribed before me on this day of _____, 2007

MAY-17-2007 09:29
Page 1 OF 1

Figure A-4. #8 Smooth Rebar, Test No. HP34-1 (Item No. c1)

FASTENAL®

## Certificate of Compliance

**Sold To:**

UNL / UNMC E-SHOP / PUNCHOUT

**Purchase Order:** E000848414

**Job:** Shaun

**Invoice Date:** 05/5/2021

THIS IS TO CERTIFY THAT WE HAVE SUPPLIED YOU WITH THE FOLLOWING PARTS.
THESE PARTS WERE PURCHASED TO THE FOLLOWING SPECIFICATIONS.

12 PCS 1-1/4" Slip 300 lb PVC Flat Pipe Cap SUPPLIED UNDER OUR TRACE NUMBER llne49403 AND UNDER PART NUMBER 0470592

2 PCS 1-1/4" x 10 ft Gray Schedule 80 PVC Plain End Pipe SUPPLIED UNDER OUR TRACE NUMBER a042821 AND UNDER PART NUMBER 0472040

This is to certify that the above document is true and accurate to the best of my knowledge.

**Fastenal Account Representative Signature**

Ross Schall

**Printed Name**

5/5/2021

**Date**

Please check current revision to avoid using obsolete copies.

This document was printed on 05/05/2021 and was current at that time.

**Fastenal Store Location/Address**

*3201 N. 23rd Street STE 1*
*LINCOLN, NE 68521*
*Phone #: (402)476-7900*
*Fax #: 402/476-7958*

Page 1 of 1

Figure A-5. PVC Tube Specifications, Test No. HP34-1 (Item No. c2 and c3)

P.O. Box 21148
Tulsa, OK 74121
Phone (918) 252-6000
Fax No. (918) 252-6520

Certified Quality and Environmental Systems
ISO 9001 / ISO 14001
Reg. No. 12455-03

Date: 12/13/2016

**Subject: Certificate of Conformance**

**Product: HIT RE-500 V3 Adhesive**

To Whom it May Concern:

This is to certify that the HIT-RE 500 V3 is a high-strength, slow cure two-part epoxy adhesive contained in two cartridges separating the resin from the hardener.

Additionally, this certifies that the product has been seismically and cracked concrete qualified as represented in ICC-ES report ESR- 3814.

Sincerely,

**Hilti, Inc.**

5400 South 122 East Avenue

Tulsa, Oklahoma 74146

800-879-8000

800-879-7000 fax

US-Sales@hilti.com

Figure A-6. Epoxy Specifications, Test No. HP34-1 (Item No. c4)

PRODUCT DATA

W. R. MEADOWS
SEALTIGHT

MasterFormat: 03 15 00

NO. 320-F

APRIL 2018
(Supersedes March 2016)

## FIBRE EXPANSION JOINT

Multi-Purpose, Expansion-Contraction Joint Filler

### DESCRIPTION

FIBRE EXPANSION JOINT is composed of cellular fibers securely bonded together and uniformly saturated with asphalt to assure longevity. Wherever a cost-effective joint filler is required, FIBRE EXPANSION JOINT meets the need. Manufactured and marketed by W. R. MEADOWS since the early 1930s, FIBRE EXPANSION JOINT is backed by over 80 years of proven application experience. FIBRE EXPANSION JOINT is versatile, resilient, flexible, and non-extruding. When compressed to half of its original thickness, it will recover to a minimum of 70% of its original thickness. FIBRE EXPANSION JOINT will not deform, twist, or break with normal on-the-job handling. Breakage, waste and functional failure resulting from the use of inferior, foreign fiber materials can cost you time and dollars and can result in a substandard finished job, generating costly callbacks and rework expenses. However, the purchase and installation of FIBRE EXPANSION JOINT (a small segment of the total project's cost) contributes to both the final cost efficiency and functional success, far greater in proportion than its original cost.

Representative United States patents: USPNs 7,815,722; 8,057,638; 8,038,845; and D558,305. (See also www.wrmeadows.com/patents for further patent/intellectual property information.)

### USES

FIBRE EXPANSION JOINT is ideal for use on highways, streets, airport runways, sidewalks, driveways, flatwork, and scores of commercial and industrial applications subject to pedestrian and vehicular traffic.

### FEATURES/BENEFITS

- Provides the ideal product for the majority of all expansion/contraction joint requirements.
- Non-extruding ... versatile ... offers a minimum 70% recovery after compression.
- This tough, lightweight, easy-to-use, semi-rigid joint filler is available in strips and shapes fabricated to your requirements.
- Easy to cut ... dimensionally stable ... not sticky in summer or brittle in winter.
- Provides neat, finished joints requiring no trimming.
- Often copied ... but never equaled.
- Remains the standard of the industry today ... with over 80 years of proven and satisfactory performance.
- Can be punched for dowel bars and laminated to thicknesses greater than 1" (25.4 mm).

MADE IN THE U.S.A. W. R. MEADOWS SEALTIGHT FIBRE EXPANSION JOINT

| Conforms to or meets: | Thickness | Slab Widths | Standard Lengths | Weight per ft.$^3$ |
|---|---|---|---|---|
| • AASHTO M 213<br>• ASTM D1751<br>• Corps of Engineers CRD-C 508<br>• FAA Specification Item P-610-2.7<br>•HH-F-341 F, Type 1 | 3/8", 1/2" 3/4", 1" (9.5, 12.7, 19.1, 25.4 mm) | 36", 48" (.91, 1.22 m) | 10' (3.05 m) Also available: 5', 6', 12' (1..5, 1.83, 3.66 m) | >19 lb. |

*CONTINUED ON REVERSE SIDE…*

**W. R. MEADOWS, INC.**
P.O. Box 338 • HAMPSHIRE, IL 60140-0338
Phone: 847/214-2100 • Fax: 847/683-4544
1-800-342-5976
www.wrmeadows.com

HAMPSHIRE, IL /CARTERSVILLE, GA /YORK, PA
FORT WORTH, TX /BENICIA, CA /POMONA, CA
GOODYEAR, AZ / MILTON, ON /ST. ALBERT, AB

Figure A-7. Fiber Expansion Joint Filler, Test No. HP34-1 (Item No. c5)

# Pecora 301 NS

**Specification Data Sheet**

PECORA CORPORATION®
Architectural Weatherproofing Products
U.S.A. • since 1862

**Non-Sag Silicone Highway & Pavement Joint Sealant**

## 1. BASIC USES

Sealing of transverse contraction and expansion joints, longitudinal, centerline and shoulder joints in Portland cement concrete (PCC) and asphalt.

## 2. MANUFACTURER

Pecora Corporation
165 Wambold Road
Harleysville, PA 19438
Phone: 215-723-6051
800-523-6688
Fax: 215-721-0286
Website: www.pecora.com

## 3. PRODUCT DESCRIPTION

Pecora 301 NS Silicone Pavement Sealant is a one part, ultra low modulus product designed for sealing joints in concrete or asphalt pavement. It has excellent unprimed adhesion to concrete, metal and asphalt substrates, superior weather resistance and remains flexible at extremely low temperatures.

Pecora 301 NS Silicone Pavement Sealant is a non-sag product designed for applications on flat and sloped surfaces.

**Advantages:**

- Reduces pavement deterioration by restricting surface water penetration into underlying base and sub base layers.
- Convenient one component, neutral moisture curing system.
- Ultra low modulus resulting in high movement capability.
- Ease of application with standard automated bulk dispensing equipment such as Graco or Pyles.
- VOC compliant.
- Primerless adhesion to concrete and asphalt.
- Aids in elimination of non-compressables entering expansion joints.

**Limitations:**

Pecora 301 NS Silicone Pavement Sealant should not be used:

- for continuous water immersion conditions.
- when ambient temperatures is below 40°F (4°C) or above 120°F (49°C).
- flush with traffic surface. **(Sealant must be recessed below surface.)**
- for applications requiring support of hydrostatic pressures.
- with solvents for dilution purposes.
- with concrete that is cured less than 7 days.
- with newly applied asphalt until cooled to ambient temperature (usually 24-48 hours).
- as a structural component or in longitudinal joints greater than 3/4" in width that are intended to be used as a constant travelling surface.

**PACKAGING**

- 30 fl. oz. (887ml) cartridges
- 20 fl. oz. (592ml) sausages
- 4.5 gallon pails (17.0L)
- 50 gallon drum (188.9L)

Color: pavement gray

**SEALANT COVERAGE CHART RECESS GUIDELINES**

| Joint Width (inches) | Sealant Depth (inches) | Recess (inches) | Backer Rod Diameter (in) | Minimum Joint Depth (in) | Linear ft./gal |
|---|---|---|---|---|---|
| 1/4 | 1/4 | 1/8 | 3/8 | 3/4 | 308 |
| 3/8 | 1/4 | 1/8 | 1/2 | 7/8 | 205 |
| 1/2 | 1/4 | 1/8 | 5/8 | 1-1/4 | 154 |
| 3/4 | 3/8 | 1/4 | 7/8 | 1-1/4 | 68 |
| 1.0 | 1/2 | 1/4 | 1-1/4 | 2 | 38 |

**TABLE 1: TYPICAL UNCURED PROPERTIES**

| Test Property | Value | Test Procedure |
|---|---|---|
| Cure Through (days) | 7 | 0.5" cross section |
| Extrusion Rate (grams/min) | 90-250 | Mil-S-8802 |
| Rheological Properties | non-sag | |
| Tack Free Time (mins) | 60 | ASTM C679 |
| VOC Content (g/L) | 50 | ASTM D3960 |

**TABLE 2: TYPICAL CURED PROPERTIES (After 7 days cure at 77°F (25°C), 50% RH)**

| Test Property | Value | Test Procedure |
|---|---|---|
| Adhesion, minimum elongation | | ASTM D5329* |
| Asphalt | 500 | |
| Concrete | 500 | |
| Metal | 500 | |
| Elongation (%) | >1400 | ASTMD412 |
| Resilience (%) | >95 | ASTM D5329 |
| Stress @ 150% Elongation (psi) | 22 | ASTMD412 |
| Hardness, maximum 21 day cure (Shore 00) Joint | 60 | ASTM C661 |
| Movement Capability +100/-50%; 10 cycles | Pass | ASTM C719 |

*modified section 14

Since Pecora architectural sealants are applied to varied substrates under diverse environmental conditions and construction situations it is recommended that substrate testing be conducted prior to application.

Figure A-8. Expansion Joint Sealant, Test No. HP34-1 (Item No. c6)

NUCOR®

NUCOR STEEL TUSCALOOSA, INC.

**MILL TEST CERTIFICATE**

Nucor Steel Tuscaloosa, Inc.
1700 HOLT RD N.E.
Tuscaloosa, AL 35404-1000
800 800-8204
customerservice@nucortusk.com

Page:1 of 1

| Load Number | Tally | Mill Order Number | PO NO \| Line NO | Part Number | Certificate Number | Prepared |
|---|---|---|---|---|---|---|
| R265880 | 00000000972397 | N-187229-005 | 4500357930 5 | | S97239701-1 | 01/19/2021 07:56 |

**Grade**

**Order Description:**
Hot Roll Plate From Coil
A36, 0.7500 IN x 72.000 IN x 120.000 IN
**Quality Plan Description:**
A36/SA36/A70936: ASTM A36-19/ASME SA36-19/ASTM A709-36-18

**Customer:**

**Sold TO:**
STEEL AND PIPE SUPPLY CO INC GARDNER KS
**Ship TO:**
STEEL & PIPE SUPPLY Gardner KS
**Sent TO:**

| Shipped Item | Heat/Slab Number | Certified By | C | Mn | P | S | Si | Cu | Ni | Cr | Mo | Cb | V | Al | Ti | N2 | B | Ca | Sn | CEV | ACI |
|---|---|---|---|---|---|---|---|---|---|---|---|---|---|---|---|---|---|---|---|---|---|
| 1A1414C | 21B2688-03 *** | 21B2688 | 0.18 | 0.88 | 0.009 | 0.004 | 0.06 | 0.20 | 0.06 | 0.07 | 0.016 | 0.001 | 0.005 | 0.028 | 0.001 | 0.006 | 0.0002 | 0.0021 | 0.006 | 0.36 | |
| 1A1414D | 21B2688-03 *** | 21B2688 | 0.18 | 0.88 | 0.009 | 0.004 | 0.06 | 0.20 | 0.06 | 0.07 | 0.016 | 0.001 | 0.005 | 0.028 | 0.001 | 0.006 | 0.0002 | 0.0021 | 0.006 | 0.36 | |

| Shipped Item | Certified By | Heat/Slab Number | Yield ksi | Tensile ksi | Y/T % | ELONGATION % 2" | ELONGATION % 8" | Bend OK? | Hard HB | Charpy Impacts (ft-lbs) Size mm | 1 | 2 | 3 | Avg | Shear % 1 | 2 | 3 | Avg | Test Temp |
|---|---|---|---|---|---|---|---|---|---|---|---|---|---|---|---|---|---|---|---|
| 1A1414C | S1A1414FTT | 21B2688-03 *** | 52.5 | 71.9 | 73.0 | 40.2 | | | | | | | | | | | | | |
| 1A1414C | S1A1414MTT | 21B2688-03 *** | 51.3 | 68.8 | 74.6 | 39.9 | | | | | | | | | | | | | |
| 1A1414D | S1A1414FTT | 21B2688-03 *** | 52.5 | 71.9 | 73.0 | 40.2 | | | | | | | | | | | | | |
| 1A1414D | S1A1414MTT | 21B2688-03 *** | 51.3 | 68.8 | 74.6 | 39.9 | | | | | | | | | | | | | |

**Items:** 2 **PCS:** 12 **Weight:** 22053 **LBS**

Mercury has not come in contact with this product during the manufacturing process nor has any mercury been used by the manufacturing process. Certified in accordance with EN 10204 3.1. No weld repair has been performed on this material. Yield strength is determined by the 0.2% offset method unless otherwise noted. Manufactured to a fully killed fine grain practice.
NUTEMPER TEMPER PASSED plate from coil
ISO 9001:2015 Registered, PED Certified

We hereby certify that the product described above passed all of the tests required by the specifications.

Dr. Qiulin Yu - Metallurgist

'***' indicates Heats melted and Manufactured in the U.S.A.

Figure A-9. ¾-in. Base Plate, Test No. HP34-1 (Item No. d1)

EXLTUBE

1000 BURLINGTON STREET, NORTH KANSAS CITY, MO 64116 1-816-474-5210 TOLL FREE 1-800-892-TUBE

**STEEL VENTURES, LLC dba EXLTUBE**

## Certified Test Report

| Customer: | Size: 02.50X02.50 | Customer Order No: | Customer Part No: |
|---|---|---|---|
| SPS - Tulsa<br>1020 Fort Gibson Road<br>Catoosa OK 74015-3033 | Gauge: 1/4 | E450000492 | 6521625020 |
| | Date: 02/11/2021 | Delivery No: 83922364<br>Load No: 7011501 | Length: 20 FT |
| | Specification: ASTM A500-13 Gr.B/C | | |

| Heat No | Yield KSI | Tensile KSI | Elongation % 2 Inch |
|---|---|---|---|
| 98987D | 66.0 | 73.4 | 30.50 |

| Heat No | C | MN | P | S | SI | CU | NI | CR | MO | V |
|---|---|---|---|---|---|---|---|---|---|---|
| 98987D | 0.1500 | 0.8300 | 0.0060 | 0.0080 | 0.0120 | 0.0300 | 0.0100 | 0.0300 | 0.0000 | 0.0000 |

This material was melted & manufactured in the U.S.A. This material meets the Buy America requirement of 23 CFR 635.410.
Coil Producing Mill: UNITED STATES STEEL, Granite City, IL

We hereby certify that all test results shown in this report are correct as contained in the records of our company. All testing and manufacturing is in accordance to A.S.T.M. parameters encompassed within the scope of the specifications denoted in the specification and grade tiles above. This product was manufactured in accordance with your purchase order requirements.

This material has not come into direct contact with mercury, any of its compounds, or any mercury bearing devices during our manufacturing process, testing, or inspections.

This material is in compliance with EN 10204 Section 4.1 Inspection Certificate Type 3.1

Tensile test completed using test specimen with 3/4" reduced area.

STEEL VENTURES, LLC dba EXLTUBE

Jonathan Wolfe
Quality Assurance Manager

Figure A-10. HSS2½x2½x¼, 13¾-in. Pedestrian Handrail Post, Test No. HP34-1 (Item No. d2)

Atlas Tube Plymouth
13101 Eckles Road
Plymouth Michigan USA
48170
Tel: 734-738-5600
Fax: 734-738-5604

Atlas Tube
A DIVISION OF ZEKELMAN INDUSTRIES

REF.B/L: 81002338
Date: 02/23/2021
Customer: 179

MATERIAL TEST REPORT

**Sold To**
Steel & Pipe Supply Company
PO Box 1688
MANHATTAN KS 66505
USA

**Shipped To**
Steel & Pipe Supply Company
310 Smith Road
JONESBURG MO 63351
USA

**Material:** 3.0x3.0x250x24'0"0(6x5). **Material No:** 300302502400 **Made in:** USA
**Melted and Poured in:** USA
**Sales Order:** 1616799 **Purchase Order:** C455005811 **Cust Material#:** 6530025024

| Heat No | C | Mn | P | S | Si | Al | Cu | Cb | Mo | Ni | Cr | V | Ti | B | N | Ca |
|---|---|---|---|---|---|---|---|---|---|---|---|---|---|---|---|---|
| A018142 | 0.210 | 0.460 | 0.005 | 0.004 | 0.020 | 0.025 | 0.090 | 0.001 | 0.010 | 0.040 | 0.060 | 0.001 | 0.001 | 0.0002 | 0.0086 | 0.0018 |

| Bundle No | PCs | Yield | Tensile | Ein 2in | Certification | CE: 0.31 |
|---|---|---|---|---|---|---|
| MA00094312 | 30 | 063870 Psi | 082480 Psi | 27 % | ASTM A500-21 GRADE B&C | |

| Heat | MILL | Mill Location | Method | Recycled_Content | Post_Consumer | Pre-Consumer (Post Industrial) | % Harvested | Within Miles of Location |
|---|---|---|---|---|---|---|---|---|
| A018142 | SDI | Columbus,MS | EAF | 76.00% | 95.00% | 5.00 % | 75% | 500 |

Material Note:
Sales Or. Note:

Authorized by Quality Assurance: Jason Richard

The results reported on this report represent the actual attributes of the material furnished and indicate full compliance with all applicable specification and contract requirements.
CE calculated using the AWS D1.1 method. This document is in compliance with the requirements of EN 10204 type 3.1

Steel Tube Institute OF NORTH AMERICA

Metals Service Center Institute

Page: 1 of 1

Figure A-11. HSS3x3x¼, 131½-in. Pedestrian Handrail, Test No. HP34-1 (Item Nos. d3 and d4)

Atlas Tube Alabama
171 Cleage Dr
Birmingham Alabama USA
35217
Tel:
Fax:

Atlas Tube
A DIVISION OF ZEKELMAN INDUSTRIES

REF.B/L: 80998064
Date: 02/12/2021
Customer: 179

MATERIAL TEST REPORT

**Sold To**
Steel & Pipe Supply Company
PO Box 1688
MANHATTAN KS 66505
USA

**Shipped To**
Steel & Pipe Supply Company
401 New Century Parkway
NEW CENTURY KS 66031
USA

**Material:** 2.0x2.0x250x40'0"0(10x3).
**Material No:** 200202504000
**Made in:** Canada
**Melted and Poured in:** Canada
**Sales Order:** 1607249
**Purchase Order:** C455003698
**Cust Material#:** 6520025040

| Heat No | C | Mn | P | S | Si | Al | Cu | Cb | Mo | Ni | Cr | V | Ti | B | N | Ca |
|---|---|---|---|---|---|---|---|---|---|---|---|---|---|---|---|---|
| 845858 | 0.170 | 0.760 | 0.008 | 0.008 | 0.018 | 0.036 | 0.042 | 0.002 | 0.005 | 0.019 | 0.035 | 0.002 | 0.002 | 0.0002 | 0.0060 | 0.0002 |

| Bundle No | PCs | Yield | Tensile | Eln 2in | Certification | CE: 0.31 |
|---|---|---|---|---|---|---|
| M102067416 | 30 | 069176 Psi | 074225 Psi | 23.5 % | ASTM A500-21 GRADE B&C | |

| Heat | MILL | Mill Location | Method | Recycled_Content | Post_Consumer | Pre-Consumer (Post Industrial) | % Harvested | Within Miles of Location |
|---|---|---|---|---|---|---|---|---|
| 845858 | STELCO | Nanticoke,ON | BOF | 36.90% | 19.80% | 14.40% | 100% | 1000 |

Material Note:
Sales Or. Note:

Authorized by Quality Assurance: Jason Richard

The results reported on this report represent the actual attributes of the material furnished and indicate full compliance with all applicable specification and contract requirements.
CE calculated using the AWS D1.1 method. This document is in compliance with the requirements of EN 10204 type 3.1

Steel Tube Institute OF NORTH AMERICA

Metals Service Center Institute

Page: 1 of 1

Figure A-12. HSS2x2x¼, 7-in. Pedestrian Handrail Splice Tube, Test No. HP34-1 (Item No. d5)

**STEEL AND PIPE SUPPLY**
SPS Coil Processing Tulsa
5275 Bird Creek Ave.
Port of Catoosa, OK 74015

# METALLURGICAL TEST REPORT

PAGE 1 of 1
DATE 02/11/2021
TIME 11:33:35
USER 40CLERK1

SOLD TO

SHIP TO
13716
Kansas City Warehouse
401 New Century Parkway
New Century KS 66031-1127

| Order | Material No. | Description | Quantity | Weight | Customer Part | Customer PO | Ship Date |
|---|---|---|---|---|---|---|---|
| 40360461-0190 | 72896240 | 1/4 96 X 240 A36 MILL PLATE | 2 | 3,267.200 | | | 02/10/2021 |

## Chemical Analysis

Heat No. A0J157 Vendor SSAB - MONTPELIER WORKS DOMESTIC Mill SSAB - MONTPELIER WORKS **Melted and Manufactured in the USA**

| Carbon | Manganese | Phosphorus | Sulphur | Silicon | Nickel | Chromium | Molybdenum | Boron | Copper | Aluminum | Titanium | Vanadium | Columbium | Produced from Coil Nitrogen | Tin |
|---|---|---|---|---|---|---|---|---|---|---|---|---|---|---|---|
| 0.1600 | 0.8400 | 0.0080 | 0.0050 | 0.0300 | 0.1100 | 0.1200 | 0.0300 | 0.0000 | 0.3000 | 0.0250 | 0.0070 | 0.0020 | 0.0000 | 0.0093 | 0.0000 |

## Mechanical / Physical Properties

Mill Coil No. A0J1570311

| Tensile | Yield | Elong (2 in) | Rckwl | Grain | Charpy | Charpy Dr | Charpy Sz | Temperature | Olsen |
|---|---|---|---|---|---|---|---|---|---|
| 71000.000 | 50500.000 | 31.50 | | | 0 | NA | | | |
| 76100.000 | 57400.000 | 28.50 | | | 0 | NA | | | |
| 79900.000 | 62000.000 | 20.80 | | | 0 | NA | | | |
| 80200.000 | 61800.000 | 21.40 | | | 0 | NA | | | |

Batch 1000084126 2 EA 3,267.200 LB

THE CHEMICAL, PHYSICAL, OR MECHANICAL TESTS REPORTED ABOVE ACCURATELY REFLECT INFORMATION AS CONTAINED IN THE RECORDS OF THE CORPORATION.
The material is in compliance with EN 10204 Section 4.1 Inspection Certificate Type 3.1
This test report shall not be reproduced, except in full, without the written approval of Steel & Pipe Supply Company, Inc.

Figure A-13. ¼-in. Steel Plate, Pedestrian Handrail End Cap Specifications, Test No. HP34-1 (Item No. d6)

Job Material Certification

Page 5 of 14

Vulcan THREADED PRODUCTS, INC.

Vulcan Threaded Products
10 Cross Creek Trail
Pelham, AL 35124
Tel (205) 620-5100
Fax (205) 620-5150

## JOB MATERIAL CERTIFICATION

**Job No:** 578337 **Job Information** **Certified Date:** 5/15/18

**Containers:** S14030915

**Customer:** Conklin and Conklin **Ship To:** 34201 Seventh Street Union City, CA 94587

**Vulcan Part No:** BAR B7 .5626x144 SC

**Customer Part No:** BAR B7 .562x144

**Customer PO No:** 18796 **Shipped Qty:** 3039 lbs

**Order No:** 350846 **Line No:** 2

**Note:**

**Applicable Specifications**

| Type | Specification | Rev | Amend | Option |
|---|---|---|---|---|
| - | ASTM F1554 Gd 105 S4 | 2015 | | |
| Heat Treat | ASME SA-193/SA-193M B7 | 2013 | | |
| | ASTM A193 B7 | 2016 | | |
| Quality | EN 10204 3.1 | 2004 | | |

**Test Results**

See following pages for tests

**Certified Chemical Analysis**

Heat No: 10543730 Origin: USA

| C | Mn | P | S | Si | Cr | Mo | Ni | V | Cu |
|---|---|---|---|---|---|---|---|---|---|
| 0.410 | 0.89 | 0.008 | 0.023 | 0.27 | 0.93 | 0.21 | 0.06 | 0.003 | 0.14 |
| Al | Nb | Sn | Ti | N | B | DI | RR | G.S. | Macro S |
| 0.027 | 0.002 | 0.006 | 0.002 | 0.0060 | 0.0001 | 5.31 | 81:1 | Fine | 2 |
| Macro R | Macro C | J1 | J2 | J3 | J4 | J5 | J6 | J7 | J8 |
| 2 | 2 | 57 | 57 | 57 | 57 | 57 | 57 | 57 | 55 |
| J9 | J10 | J12 | J14 | J16 | J18 | J20 | J24 | J28 | J32 |
| 54 | 53 | 50 | 49 | 47 | 46 | 45 | 43 | 41 | 39 |

**Notes**

Material was manufactured, tested and inspected as required by the product standard and in accordance with Vulcan's ISO 9001:2015 Quality Management System registered June 30th, 2017. No weld repair performed on the material. No Mercury used in the production of this material.
Document is in accordance with EN 10204 - 3.1B of 2004 (3.1).

*Plex 5/15/18 9:42 AM vulc.mgri Page 1 of 2*

PORTLAND BOLT
PO 46352
INV 80522
45 5/8" X 144" B7 ATR, H.D.G. 1OF2
JUNE 25, 2020

46352-4

JUL 17 2018

https://www.plexonline.com/a2a08224-b139-4fcf-b6fb-272d0eba1b07/Sales/Report_Job_Cert.asp?Mode=... 7/10/2018

Figure A-14. ⅝-in.-11 UNC, 7⅞-in. Threaded Rod, Test No. HP34-1 (Item No. d7)

Job Material Certification

Page 6 of 14

Vulcan
THREADED PRODUCTS, INC.

Vulcan Threaded Products
10 Cross Creek Trail
Pelham, AL 35124
Tel (205) 620-5100
Fax (205) 620-5150

**JOB MATERIAL CERTIFICATION**

**Job No:** 578337 **Job Information** **Certified Date:** 5/15/18

**Containers:** S14030915

**Test Results**

**Part No:** BAR B7 .5626x292 HT

**Test No:** 48511 **Test:** Quench & Temper Information (Lbs)

| Description | Austenitizing Temp (F) | Tempering Temp (F) | Run Speed (Ft/min) | Quench Water Temp (F) | Note |
|---|---|---|---|---|---|
| Quench & Temper Information Results | 1,652 | 1,328 | 37 | 89 | |

**Test No:** 48514 **Test:** Partial Decarb Test

| Description | Surface Carb. (in.) | Surface Decarb. (in.) | Note |
|---|---|---|---|
| | 0.000 | 0.003 | |

**Test No:** 48512 **Test:** A193 B7, F1554-105 Requirements

| Description | Tensile (ksi) | Yield 0.2% Offset (ksi) | Elongation (%) | Elongation Gage Length | ROA (%) | Midradius Hardness | Surface Hardness | Center Hardness | Hardness Test Type | Note |
|---|---|---|---|---|---|---|---|---|---|---|
| | 135 | 125 | 21 | 4D | 63 | 30 | 28 | | HRC | |
| | 136 | 125 | 22 | 4D | 63 | 30 | 28 | | HRC | |
| | 136 | 125 | 24 | 4D | 60 | 31 | 28 | | HRC | |
| | 136 | 125 | 23 | 4D | 62 | 30 | 28 | | HRC | |
| | 135 | 125 | 23 | 4D | 64 | 30 | 27 | | HRC | |
| | 134 | 124 | 23 | 4D | 63 | 31 | 27 | | HRC | |
| | 136 | 125 | 22 | 4D | 62 | 31 | 29 | | HRC | |

**Test No:** 48513 **Test:** F1554-15 gd105 S4 Charpy ft/lbs Requirements

| Description | Container | Test Temp (F) | Test1 (ft/lbs) | Test2 (ft/lbs) | Test3 (ft/lbs) | Results Avg (ft/lbs) | Note |
|---|---|---|---|---|---|---|---|
| | | -20 | 179 | 144 | 190 | 171 | |

Mitchell Griffin 5/15/18

Griffin, Mitchell - Certification Engineer Date

*Plex 5/15/18 9:42 AM vulc.mgri Page 2 of 2*

PORTLAND BOLT
PO 46352
INV 80522
45 5/8" X 144" B7 ATR, H.D.G. 2OF2
JUNE 25, 2020

JUL 17 2018

https://www.plexonline.com/a2a08224-b139-4fcf-b6fb-272d0eba1b07/Sales/Report_Job_Cert.asp?Mode=... 7/10/2018

Figure A-15. ⅝-in.-11 UNC, 7⅞-in. Threaded Rod, Cont., Test No. HP34-1 (Item No. d7)

STEEL AND PIPE SUPPLY

SPS Coil Processing Tulsa
5275 Bird Creek Ave.
Port of Catoosa, OK 74015

**METALLURGICAL TEST REPORT**

PAGE 1 of 1
DATE 03/19/2021
TIME 08:14:03
USER 40CLERK1

SOLD TO

SHIP TO
13716
Kansas City Warehouse
401 New Century Parkway
New Century KS 66031-1127

| Order | Material No. | Description | Quantity | Weight | Customer Part | Customer PO | Ship Date |
|---|---|---|---|---|---|---|---|
| 40363783-0060 | 70672120TM | 3/16 72 X 120 A36 TEMPERPASS STPMLPL | 9 | 4,136.400 | | | 03/18/2021 |

**Chemical Analysis**

Heat No. 21013251 Vendor BIG RIVER STEEL LLC DOMESTIC Mill BIG RIVER STEEL LLC **Melted and Manufactured in the USA**

| Carbon | Manganese | Phosphorus | Sulphur | Silicon | Nickel | Chromium | Molybdenum | Boron | Copper | Aluminum | Titanium | Vanadium | Columbium | Produced from Coil Nitrogen | Tin |
|---|---|---|---|---|---|---|---|---|---|---|---|---|---|---|---|
| 0.0600 | 0.8500 | 0.0110 | 0.0030 | 0.0200 | 0.0400 | 0.0500 | 0.0160 | 0.0001 | 0.1100 | 0.0250 | 0.0010 | 0.0040 | 0.0020 | 0.0093 | 0.0043 |

**Mechanical / Physical Properties**

Mill Coil No. 21013251-01

| Tensile | Yield | Elong (2 in) | Rckwl | Grain | Charpy | Charpy Dr | Charpy Sz | Temperature | Olsen |
|---|---|---|---|---|---|---|---|---|---|
| 66500.000 | 50200.000 | 30.10 | | | 0 | NA | | | |
| 66000.000 | 48900.000 | 30.70 | | | 0 | NA | | | |
| 65800.000 | 48900.000 | 29.50 | | | 0 | NA | | | |
| 66100.000 | 49300.000 | 31.50 | | | 0 | NA | | | |

Batch 1000139270 9 EA 4,136.400 LB

THE CHEMICAL, PHYSICAL, OR MECHANICAL TESTS REPORTED ABOVE ACCURATELY REFLECT INFORMATION AS CONTAINED IN THE RECORDS OF THE CORPORATION.
The material is in compliance with EN 10204 Section 4.1 Inspection Certificate Type 3.1
This test report shall not be reproduced, except in full, without the written approval of Steel & Pipe Supply Company, Inc.

Figure A-16. $^{3}/_{16}$-in. Pedestrian Handrail Shim Plate, Test No. HP34-1 (Item No. d8)

**Haiyan Sanma Standrd Hardware Co.,Ltd**

SANMA

**The report is issued according to EN 10204:2004 3.1and ISO 16228 F3.1**

地址：:浙江海盐于城镇八字村五金工业园区振兴路 5 号
No.5Zhenxing Road,Yucheng Lndustry Pack Zone,
HaiyanZhejiang,China

电话(Tel)：0573-86466128

传真(Fax)：0573-86466118

合同号 Po No: U74324

日期 Report Date:2020.07.01

Country of Origin:China Part No.:313003

生产日期 Manufacture Date:2020.06.01

客户名称 Customer：BRIGHTON-BEST INTERNATIONAL (TAIWAN) INC.

品 名 Product：ASTMA194-17-2H Heavy Hex Nuts
规 格 Size：5/8"-11 metal keg
表面处理 Finish:HDG W/WAX ASTM F2329-15
批 号 Lot No：U74324-313003

数 量 Quantity:16.20mpcs
标 记 Marker: SHS 2HZN
检验标准 Inspection Standard：ASTM A194-17
尺寸标准 Dimensional Specification:ASME B18.2.2-2015

一、钢材性质 STEEL PROPERTIES:
材质 Material:SWRCH45K 热处理批号 Heat No: 20102058 规格 Steel Size:o24mm

| ELEMENT (成份) | C% | Mn% | P% | S% | Si% | Cr% | Ni% |
|---|---|---|---|---|---|---|---|
| TEST Facility :S | 0.44 | 0.66 | 0.015 | 0.004 | 0.15 | 0.04 | 0.01 |

二、项目检测 Inspections Item：

| 检测项目 Item | 标 准 值 Specified(in) | 实 测 值 Actual Result | 判定 Judgement |
|---|---|---|---|
| TEST Facility :M Appearance | Passed | Passed | OK |
| TEST Facility :M Across Flat(in) | 1.031-1.062 | 1.035-1.042 | OK |
| TEST Facility :M Across Corner(in) | 1.175-1.227 | 1.184-1.192 | OK |
| TEST Facility :M Thickness(in) | 0.587-0.631 | 0.595-0.620 | OK |
| TEST Facility :M Threed | 2B GO | OK | OK |
| | 2B NOGO | OK | OK |
| TEST Facility :M Hardness | 24-35 | 29-33 | OK |
| TEST Facility :M Proof Load | 175KSI | 175KSI | OK |
| TEST Facility :M Hardness After 24H AT 540℃ | MIN 89 | 93-97 | OK |
| TEST Facility :M Tempering Temperature | Min 455 | 530-545 | OK |
| TEST Facility :M Macro Etch Test | S1/R1/C1-S4/R4/C4 | S2/R2/C2 | OK |
| TEST Facility :M Plating thickness | Min 43 μ m | 55-60 μ m | OK |

品保主管 Signature： HU SHAO QING

Figure A-17. ⅝"-11 UNC Heavy Hex Nut, Test No. HP34-1 (Item No. e1)

湖南华菱湘潭钢铁有限公司
HUNAN VALIN XIANGTAN IRON AND STEEL CO., LTD
产品质量证明书
MILL'S TEST CERTIFICATE/INSPECTION CERTIFICATE

湖南省湘潭市岳塘区
Zip Code: 411101
Yuetang, Xiangtan, Hunan, P.R.C.
Phone: (0086-731) 58653019
Fax: (0086-731) 58653019
http://www.hnxg.com.cn

正页第1页共1页

| | | | | | | | |
|---|---|---|---|---|---|---|---|
| 证明书号 Certificate No. | X3202002290001 | 交货状态 Condition Of Supply | 热轧(AR) | 车号 Train No. | 65095 | 标准 Specification | Q/OHAB 113-2019 |
| 订单号 Order No. | 21200B9017 | 牌号 Steel Grade | XSWRCH45K | 发货日期 Date Of Delivery | 20200229021813 | 产品名称 Product | 冷镦用钢 |
| 采购订单号Pur Order No | | | | | | | |
| 订货单位 Customer | 杭州包杭实业投资集团有限公司 | | | 运输方式 Transported By | 水运代运 | 许可证号 License No. | |
| 收货单位 Purchaser Product | 海盐包杭钢铁物资有限公司 | | | 到站 Destination | 海盐大桥码头 | 许可证有效期 Valid To | |

| 炉号 Heat No. | 轧制批号 Lot No. | 生产日期 Date Of Production | 规格 Size (mm) | 数量 Quantity 盘(Coils) | 重量 Weight (t) | 化学成分 Chemical Compositon, % C | Si | Mn | P | S | Ni | Cr | Cu | As | 气体量,% Gas content O | N | H |
|---|---|---|---|---|---|---|---|---|---|---|---|---|---|---|---|---|---|
| | | | | | | -2 10 | -2 10 | -2 10 | -3 10 | -3 10 | -2 10 | -2 10 | -2 10 | -4 10 | | | |
| 20101714 | X32021164 | 20200227 | 24 | 2 | 4.166 | 45 | 19 | 65 | 14 | 4 | 1 | 4 | 3 | 36 | | | |
| 20102058 | X32021163 | 20200227 | 24 | 11 | 22.924 | 44 | 15 | 66 | 15 | 4 | 1 | 6 | 2 | 31 | | | |
| 20201745 | X32021161 | 20200227 | 24 | 16 | 33.417 | 45 | 15 | 71 | 16 | 2 | 1 | 6 | 2 | 29 | | | |
| 20201745 | X32021162 | 20200227 | 24 | 1 | 2.082 | 45 | 15 | 71 | 16 | 2 | 1 | 6 | 2 | 29 | | | |

| 炉号 Heat No. | 轧制批号 Lot No. | 屈服强度 Y.S (Mpa) | 抗拉强度 T.S (Mpa) | 断后伸长率 A (%) | 断面收缩率 Z (%) | 冲击试验 Impact Test (J) | 硬度 Hardness 表面 Surface | 端面 Endface | 冷弯 C.B d= a | 热顶锻 H.T. | 冷顶锻 U.T. HT | 末端淬透性 JOMINY HARDENABILITY | 金相组织 M.S. | 全脱碳层 FULL DEC. mm | 总脱碳层 Total DEC. AR | | 索氏体含量 S,% | 魏氏组织 W.S 级 Grade | 晶粒度 G.S | |
|---|---|---|---|---|---|---|---|---|---|---|---|---|---|---|---|---|---|---|---|---|
| | | AR | AR | AR | AR | T- °C | | | ° | | 1/3 | | AR | AR | mm | % | AR | AR | Max | Min |
| 20101714 | X32021164 | 411 | 652 | 21.5 | 38 | | | | | | 合格 | | | 0 | | 0.42 | | | | |
| 20102058 | X32021163 | 402 | 656 | 21 | 44 | | | | | | 合格 | | | 0 | | 0.42 | | | | |
| 20201745 | X32021161 | 414 | 662 | 22 | 40 | | | | | | 合格 | | | 0 | | 0.42 | | | | |
| 20201745 | X32021162 | 423 | 654 | 22 | 51 | | | | | | 合格 | | | 0 | | 0.42 | | | | |

| | | | | | |
|---|---|---|---|---|---|
| 合计(Total) 30 盘(Coils) | 小计(Subtotal) 62.589 t /总计(Total) 62.589 t | 探伤检查标准 Detection Standard | | 判定 Determine | |
| 备注 Remarks | 热轧态：AR.热处理态：HT。建议时效10天以上。 | | | | |
| 声明 Declaration | 本证明书所列产品均按订单标准进行制造和检验，其结果符合要求，特此证明。 WE HEREBY CERTIFY THAT MATERIAL DESCRIBED HEREIN HAS MANUFACTURED AND TESTED WITH SATISFACTORY RESULTS IN ACCORDANCE WITH THE REQUIREMENTS OF THE ABOVE MATERIAL SPECIFICATION. | 质量管理负责人 Quality Control Principal | | | |

Figure A-18. ⅝"-11 UNC Heavy Hex Nut, Cont., Test No. HP34-1 (Item No. e1)

TECHNICAL STAMPING TSI EST. 1991

**TECHNICAL STAMPING, INC.**

50600 E. RUSSELL SCHMIDT BLVD.
CHESTERFIELD TWP., MI 48051
PH(586)948-3285 / FX(586)948-3286

**MATERIAL CERTIFICATION**

| CUSTOMER NAME | CUSTOMER ORDER NUMBER | DATE |
|---|---|---|
| Portland Bolt & Mfg Co | 48544 | 11/12/2020 |

| PART NUMBER - CUSTOMER LOT NO. | LOT NUMBER | QUANTITY |
|---|---|---|
| 5/8" F436 Hdg 16443 | 0820-553 | 12,500 |

| STEEL GRADE | HEAT | C | MN | P | S | SI | AL | REVISION |
|---|---|---|---|---|---|---|---|---|
| 1050 | 107480 | .53 | .83 | .012 | .003 | .249 | .031 | ASTM F-436-10 |

| SPECIFICATION | ACTUAL | GAUGE |
|---|---|---|
| O.D - 1.281 - 1.345 | 1.286 - 1.289 | CALIPER |
| I.D - .688 - .720 | .707 - .710 | CALIPER, PIN GAUGE |
| THICKNESS- .122 - .177 | .130 - .133 | MICROMETER |
| FLAT- Max .010 | .005 | CALIPER |
| HEAT TREAT - 38 - 45HRC | 40 - 43 | |
| PLATING- | See Attached Cert | |
| OTHER | N/A | |
| | | |

WE HEARBY CERTIFY THIS PRODUCT WAS PRODUCED UNDER A ISO-9001:2015 QUALITY ASSURANCE SYSTEM. ISO-9001:2015
ALL MATERIALS ARE MADE AND MELTED IN THE U.S.A. THIS PRODUCT WAS MANUFACTURED IN CHESTERFIELD, MICHIGAN, U.S.A. THIS PRODUCT CONFORMS TO ALL REQUIREMENTS FOR WASHERS AS PRODUCED ACCORDING TO A.S.T.M. F-436-10. THE ABOVE TEST RESULTS APPLY ONLY TO THE ITEMS TESTED. THIS TEST REPORT MUST NOT BE REPRODUCED EXCEPT IN FULL WITHOUT PRIOR WRITTEN APPROVAL.

**CERTIFIED ISO 9001:**

Sherrie L Michon
AUTHORIZED SIGNATURE

**" MADE AND MANUFACTURED IN THE USA"**

Qfy.3008 Rev. 2 11/26/01

U85U4-2

Figure A-19. ⅝-in. Washer, Test No. HP34-1 (Item No. e2)

**INDUSTRIAL STEEL TREATING COMPANY, INC**

613 Carroll Street Jackson, MI 49202
P.O. Box 98 Jackson MI, 49204
Voice: 517-787-6312 Fax: 517-787-5441

# HEAT TREAT CERTIFICATION

Customer:
TECHNICAL STAMPING, INC.
Attn: SHANNON COX
50600 E. RUSSELL SCHMIDT
CHESTERFIELD, MI 48051

Certification Date:
08/28/2020

Page: 1 of 1

## Order Details

| | | | |
|---|---|---|---|
| Part Number: | F0058 | Blue Print Rev: | 1279 |
| Packing Slip: | 1206 | Material Type: | 1030 - 1050 |
| Purchase Order: | | Quantity: | 261,220 |
| IST Order Number: | 77400-1 | Net Weight: | 8,568.0 |
| Lot Number: | 0820-553 | Part Desc: | WASHER |
| Heat Number: | 107480 | Comments: | 5 TUBS-111,267,23,709,52 |

## SPECIFICATIONS

HRC 38 - 45
HEAT TREATED IN THE USA

## RESULTS

HRC 40-43
HEAT TREATED IN THE USA

Approval:

Tom Levy - Quality Assurance Supervisor

Contact

Tom Levy - Quality Assurance Supervisor
Voice: 517-780-9043 Fax: 517-787-5441
E-Mail: tolevy@indstl.com

This Certification cannot be reproduced except in full, without written authorization from Industrial Steel Treating Company, LLC

Figure A-20. ⅝-in. Washer, Test No. HP34-1 (Item No. e2)

# Appendix B. Vehicle Center of Gravity Determination

| | | | | | |
|---|---|---|---|---|---|
| | | Test Name: | HP34 | VIN: | 1C6RR6LG3GS201339 |
| Model Year: | 2016 | Make: | Dodge | Model: | Ram 1500 crew cab |

**Vehicle CG Determination**

| | Vehicle Equipment | Weight (lb) | Vertical CG (in.) | Vertical M (lb-in.) |
|---|---|---|---|---|
| + | Unballasted Truck (Curb) | 5117 | 29.488445 | 150892.38 |
| + | Hub | 19 | 15.875 | 301.625 |
| + | Brake activation cylinder & frame | 7 | 29 | 203 |
| + | Pneumatic tank (Nitrogen) | 30 | 27.5 | 825 |
| + | Strobe/Brake Battery | 5 | 27 | 135 |
| + | Brake Receiver/Wires | 5 | 54 | 270 |
| + | CG Plate including DAQ | 50 | 30 | 1500 |
| - | Battery | -38 | 42.5 | -1615 |
| - | Oil | -8 | 18 | -144 |
| - | Interior | -109 | 53 | -5777 |
| - | Fuel | -158 | 19 | -3002 |
| - | Coolant | 0 | | 0 |
| - | Washer fluid | -5 | 38 | -190 |
| + | Water Ballast (In Fuel Tank) | 80 | 17 | 1360 |
| + | Onboard Supplemental Battery | 5 | 27 | 135 |
| | | | | 0 |
| | | | | 0 |
| | | | | 144894 |

Note: (+) is added equipment to vehicle, (-) is removed equipment from vehicle

| | |
|---|---|
| Estimated Total Weight (lb) | 5000 |
| Vertical CG Location (in.) | 28.9788 |

**Vehicle Dimensions for C.G. Calculations**

| | | | | | |
|---|---|---|---|---|---|
| Wheel Base: | 140.375 | in. | Front Track Width: | 68.125 | in. |
| | | | Rear Track Width: | 68 | in. |

| Center of Gravity | 2270P MASH Targets | Test Inertial | Difference |
|---|---|---|---|
| Test Inertial Weight (lb) | 5000 ± 110 | 5002 | 2.0 |
| Longitudinal CG (in.) | 63 ± 4 | 64.995702 | 1.99570 |
| Lateral CG (in.) | NA | -0.721174 | NA |
| Vertical CG (in.) | 28 or greater | 28.98 | 0.97880 |

Note: Long. CG is measured from front axle of test vehicle

Note: Lateral CG measured from centerline - positive to vehicle right (passenger) side

**CURB WEIGHT (lb)**

| | Left | Right |
|---|---|---|
| Front | 1410 | 1338 |
| Rear | 1186 | 1183 |

| | | |
|---|---|---|
| FRONT | 2748 | lb |
| REAR | 2369 | lb |
| TOTAL | 5117 | lb |

**TEST INERTIAL WEIGHT (lb)**

| | Left | Right |
|---|---|---|
| Front | 1396 | 1290 |
| Rear | 1158 | 1158 |

| | | |
|---|---|---|
| FRONT | 2686 | lb |
| REAR | 2316 | lb |
| TOTAL | 5002 | lb |

Figure B-1. Vehicle Mass Distribution, Test No. HP34-1

# Appendix C. Vehicle Deformation Records

Model Year: 2016

Test Name: HP34
Make: Dodge

VIN: 1C6RR6LG3GS201339
Model: Ram 1500 crew cab

**VEHICLE DEFORMATION**
**PASSENGER SIDE FLOOR PAN - SET 1**

| | POINT | Pretest X (in.) | Pretest Y (in.) | Pretest Z (in.) | Posttest X (in.) | Posttest Y (in.) | Posttest Z (in.) | ΔX[A] (in.) | ΔY[A] (in.) | ΔZ[A] (in.) | Total Δ (in.) | Crush[B] (in.) | Directions for Crush[C] |
|---|---|---|---|---|---|---|---|---|---|---|---|---|---|
| TOE PAN - WHEEL WELL (X, Z) | 1 | 62.4165 | 31.8179 | -8.2648 | 62.1814 | 31.9636 | -8.1427 | 0.2351 | -0.1457 | -0.1221 | 0.3023 | 0.2351 | X |
| | 2 | 63.1537 | 35.3499 | -6.1182 | 62.7954 | 35.4234 | -5.8783 | 0.3583 | -0.0735 | -0.2399 | 0.4374 | 0.3583 | X |
| | 3 | 64.4582 | 39.0904 | -2.6371 | 63.7273 | 38.8401 | -2.9085 | 0.7309 | 0.2503 | 0.2714 | 0.8189 | 0.7797 | X, Z |
| | 4 | 64.5389 | 43.8794 | -2.5691 | 61.5879 | 42.9278 | -4.3203 | 2.9510 | 0.9516 | 1.7512 | 3.5610 | 3.4315 | X, Z |
| | 5 | 64.4935 | 48.5672 | -3.7600 | 61.0299 | 46.9815 | -5.9441 | 3.4636 | 1.5857 | 2.1841 | 4.3910 | 4.0947 | X, Z |
| | 6 | 58.7458 | 27.6317 | -8.0914 | 58.4732 | 27.8241 | -8.3175 | 0.2726 | -0.1924 | 0.2261 | 0.4031 | 0.3542 | X, Z |
| | 7 | 59.4871 | 32.9890 | -5.5365 | 59.3175 | 32.9649 | -5.3529 | 0.1696 | 0.0241 | -0.1836 | 0.2511 | 0.1696 | X |
| | 8 | 61.0937 | 37.7091 | -1.2823 | 60.9974 | 37.1856 | -0.7466 | 0.0963 | 0.5235 | -0.5357 | 0.7552 | 0.0963 | X |
| | 9 | 61.4627 | 43.2626 | -0.8571 | 59.4562 | 42.1996 | -1.8209 | 2.0065 | 1.0630 | 0.9638 | 2.4668 | 2.2260 | X, Z |
| | 10 | 61.9352 | 48.8033 | -0.9718 | 59.8000 | 46.7487 | -2.2423 | 2.1352 | 2.0546 | 1.2705 | 3.2241 | 2.4846 | X, Z |
| FLOOR PAN (Z) | 11 | 55.4188 | 27.7307 | -6.2533 | 55.0522 | 27.8265 | -6.6751 | 0.3666 | -0.0958 | 0.4218 | 0.5670 | 0.4218 | Z |
| | 12 | 56.6046 | 33.3222 | -2.9539 | 56.4156 | 32.8811 | -2.7632 | 0.1890 | 0.4411 | -0.1907 | 0.5164 | -0.1907 | Z |
| | 13 | 58.0255 | 37.8624 | 0.8812 | 57.8739 | 37.2563 | 1.3952 | 0.1516 | 0.6061 | -0.5140 | 0.8090 | -0.5140 | Z |
| | 14 | 58.0934 | 44.2463 | 1.0517 | 57.6845 | 43.6713 | 1.4068 | 0.4089 | 0.5750 | -0.3551 | 0.7899 | -0.3551 | Z |
| | 15 | 58.7068 | 49.2688 | 0.8507 | 57.8829 | 47.3603 | 0.8745 | 0.8239 | 1.9085 | -0.0238 | 2.0789 | -0.0238 | Z |
| | 16 | 50.6969 | 28.5064 | -4.3391 | 50.5472 | 28.3392 | -4.4459 | 0.1497 | 0.1672 | 0.1068 | 0.2485 | 0.1068 | Z |
| | 17 | 52.4460 | 32.4232 | 0.9474 | 52.1509 | 31.8906 | 0.9130 | 0.2951 | 0.5326 | 0.0344 | 0.6099 | 0.0344 | Z |
| | 18 | 52.8550 | 37.9884 | 1.3660 | 52.6410 | 37.5330 | 1.2670 | 0.2140 | 0.4554 | 0.0990 | 0.5128 | 0.0990 | Z |
| | 19 | 52.7024 | 44.7375 | 1.4495 | 52.4778 | 44.0995 | 2.9009 | 0.2246 | 0.6380 | -1.4514 | 1.6013 | -1.4514 | Z |
| | 20 | 52.9555 | 49.6181 | 1.5617 | 52.6825 | 48.5570 | 1.8923 | 0.2730 | 1.0611 | -0.3306 | 1.1444 | -0.3306 | Z |
| | 21 | 45.0106 | 28.7830 | -3.6880 | 44.8541 | 28.9725 | -4.0682 | 0.1565 | -0.1895 | 0.3802 | 0.4527 | 0.3802 | Z |
| | 22 | 46.7252 | 31.9291 | 1.3038 | 46.5091 | 31.6168 | 1.1283 | 0.2161 | 0.3123 | 0.1755 | 0.4184 | 0.1755 | Z |
| | 23 | 46.9527 | 37.7888 | 1.3713 | 46.7399 | 37.4377 | 1.2316 | 0.2128 | 0.3511 | 0.1397 | 0.4337 | 0.1397 | Z |
| | 24 | 47.0714 | 44.2436 | 1.4452 | 47.0150 | 43.8621 | 2.0419 | 0.0564 | 0.3815 | -0.5967 | 0.7105 | -0.5967 | Z |
| | 25 | 47.1741 | 49.4925 | 1.5161 | 46.9245 | 48.6471 | 2.5190 | 0.2496 | 0.8454 | -1.0029 | 1.3352 | -1.0029 | Z |
| | 26 | 40.7951 | 28.8030 | -3.6003 | 40.5663 | 28.9453 | -4.0408 | 0.2288 | -0.1423 | 0.4405 | 0.5164 | 0.4405 | Z |
| | 27 | 40.9732 | 31.7519 | 0.5588 | 40.7721 | 31.5011 | 0.3209 | 0.2011 | 0.2508 | 0.2379 | 0.3999 | 0.2379 | Z |
| | 28 | 41.0583 | 36.4416 | 0.6000 | 40.9432 | 36.2016 | 0.2953 | 0.1151 | 0.2400 | 0.3047 | 0.4046 | 0.3047 | Z |
| | 29 | 41.1966 | 42.7650 | 0.6726 | 41.1208 | 42.5054 | 0.5375 | 0.0758 | 0.2596 | 0.1351 | 0.3023 | 0.1351 | Z |
| | 30 | 41.2755 | 47.8820 | 0.7412 | 41.2624 | 47.5653 | 0.7341 | 0.0131 | 0.3167 | 0.0071 | 0.3171 | 0.0071 | Z |

[A] Positive values denote deformation as inward toward the occupant compartment, negative values denote deformations outward away from the occupant compartment.

[B] Crush calculations that use multiple directional components will disregard components that are negative and only include positive values where the component is deforming inward toward the occupant compartment.

[C] Direction for Crush column denotes which directions are included in the crush calculations. If "NA" then no intrusion is recorded, and Crush will be 0.

| Pretest Floor Pan | Posttest Floor Pan |
|---|---|
| | |

Figure C-1. Floor Pan Deformation Data – Set 1, Test No. HP34-1

Model Year: 2016

Test Name: HP34
Make: Dodge

VIN: 1C6RR6LG3GS201339
Model: Ram 1500 crew cab

**VEHICLE DEFORMATION**
**PASSENGER SIDE FLOOR PAN - SET 2**

| | POINT | Pretest X (in.) | Pretest Y (in.) | Pretest Z (in.) | Posttest X (in.) | Posttest Y (in.) | Posttest Z (in.) | ΔX[A] (in.) | ΔY[A] (in.) | ΔZ[A] (in.) | Total Δ (in.) | Crush[B] (in.) | Directions for Crush[C] |
|---|---|---|---|---|---|---|---|---|---|---|---|---|---|
| TOE PAN - WHEEL WELL (X, Z) | 1 | 52.5255 | 17.2041 | -3.7756 | 52.4193 | 17.1550 | -3.0767 | 0.1062 | 0.0491 | -0.6989 | 0.7086 | 0.1062 | X |
| | 2 | 53.1418 | 20.7699 | -1.6468 | 52.9158 | 20.6246 | -0.7984 | 0.2260 | 0.1453 | -0.8484 | 0.8899 | 0.2260 | X |
| | 3 | 54.3064 | 24.5691 | 1.8203 | 53.7193 | 24.0573 | 2.1905 | 0.5871 | 0.5118 | -0.3702 | 0.8624 | 0.5871 | X |
| | 4 | 54.2511 | 29.3589 | 1.8557 | 51.5111 | 28.0972 | 0.7474 | 2.7400 | 1.2617 | 1.1083 | 3.2137 | 2.9557 | X, Z |
| | 5 | 54.0847 | 34.0354 | 0.6317 | 50.8880 | 32.1394 | -0.8812 | 3.1967 | 1.8960 | 1.5129 | 4.0128 | 3.5366 | X, Z |
| | 6 | 48.9731 | 12.9169 | -3.6077 | 48.8102 | 12.9322 | -3.3185 | 0.1629 | -0.0153 | -0.2892 | 0.3323 | 0.1629 | X |
| | 7 | 49.5379 | 18.3101 | -1.0833 | 49.4867 | 18.0865 | -0.3344 | 0.0512 | 0.2236 | -0.7489 | 0.7832 | 0.0512 | X |
| | 8 | 50.9694 | 23.1022 | 3.1528 | 50.9919 | 22.3376 | 4.3042 | -0.0225 | 0.7646 | -1.1514 | 1.3823 | 0.0000 | NA |
| | 9 | 51.1771 | 28.6666 | 3.5428 | 49.3547 | 27.3167 | 3.2096 | 1.8224 | 1.3499 | 0.3332 | 2.2922 | 1.8526 | X, Z |
| | 10 | 51.4939 | 34.2176 | 3.3939 | 49.6016 | 31.8731 | 2.7991 | 1.8923 | 2.3445 | 0.5948 | 3.0710 | 1.9836 | X, Z |
| FLOOR PAN (Z) | 11 | 45.6270 | 12.9339 | -1.8018 | 45.3628 | 12.8541 | -1.7341 | 0.2642 | 0.0798 | -0.0677 | 0.2842 | -0.0677 | Z |
| | 12 | 46.6224 | 18.5788 | 1.4696 | 46.5443 | 17.9326 | 2.2059 | 0.0781 | 0.6462 | -0.7363 | 0.9828 | -0.7363 | Z |
| | 13 | 47.8773 | 23.1830 | 5.2862 | 47.8319 | 22.3338 | 6.3931 | 0.0454 | 0.8492 | -1.1069 | 1.3959 | -1.1069 | Z |
| | 14 | 47.7631 | 29.5672 | 5.4127 | 47.4958 | 28.7427 | 6.4086 | 0.2673 | 0.8245 | -0.9959 | 1.3203 | -0.9959 | Z |
| | 15 | 48.2362 | 34.6037 | 5.1825 | 47.6187 | 32.4361 | 5.8838 | 0.6175 | 2.1676 | -0.7013 | 2.3604 | -0.7013 | Z |
| | 16 | 40.8668 | 13.5883 | 0.0621 | 40.8104 | 13.2604 | 0.4194 | 0.0564 | 0.3279 | -0.3573 | 0.4882 | -0.3573 | Z |
| | 17 | 42.4534 | 17.5884 | 5.3375 | 42.2421 | 16.8395 | 5.8086 | 0.2113 | 0.7489 | -0.4711 | 0.9096 | -0.4711 | Z |
| | 18 | 42.7009 | 23.1657 | 5.7211 | 42.5970 | 22.4910 | 6.1770 | 0.1039 | 0.6747 | -0.4559 | 0.8209 | -0.4559 | Z |
| | 19 | 42.3568 | 29.9082 | 5.7561 | 42.2562 | 29.0497 | 7.8151 | 0.1006 | 0.8585 | -2.0590 | 2.2331 | -2.0590 | Z |
| | 20 | 42.4708 | 34.7947 | 5.8367 | 42.3759 | 33.5122 | 6.8151 | 0.0949 | 1.2825 | -0.9784 | 1.6159 | -0.9784 | Z |
| | 21 | 35.1690 | 13.7081 | 0.6575 | 35.0988 | 13.7630 | 0.7017 | 0.0702 | -0.0549 | -0.0442 | 0.0995 | -0.0442 | Z |
| | 22 | 36.7458 | 16.9349 | 5.6433 | 36.6052 | 16.4366 | 5.9283 | 0.1406 | 0.4983 | -0.2850 | 0.5910 | -0.2850 | Z |
| | 23 | 36.8068 | 22.7991 | 5.6721 | 36.7010 | 22.2611 | 6.0419 | 0.1058 | 0.5380 | -0.3698 | 0.6614 | -0.3698 | Z |
| | 24 | 36.7423 | 29.2549 | 5.7021 | 36.8155 | 28.6889 | 6.8638 | -0.0732 | 0.5660 | -1.1617 | 1.2943 | -1.1617 | Z |
| | 25 | 36.6960 | 34.5050 | 5.7373 | 36.6077 | 33.4699 | 7.3447 | 0.0883 | 1.0351 | -1.6074 | 1.9139 | -1.6074 | Z |
| | 26 | 30.9539 | 13.6093 | 0.7052 | 30.8129 | 13.6378 | 0.6568 | 0.1410 | -0.0285 | 0.0484 | 0.1518 | 0.0484 | Z |
| | 27 | 31.0085 | 16.5899 | 4.8452 | 30.8867 | 16.1911 | 5.0242 | 0.1218 | 0.3988 | -0.1790 | 0.4538 | -0.1790 | Z |
| | 28 | 30.9606 | 21.2803 | 4.8545 | 30.9507 | 20.8943 | 5.0066 | 0.0099 | 0.3860 | -0.1521 | 0.4150 | -0.1521 | Z |
| | 29 | 30.9194 | 27.6053 | 4.8843 | 30.9801 | 27.2002 | 5.2588 | -0.0607 | 0.4051 | -0.3745 | 0.5550 | -0.3745 | Z |
| | 30 | 30.8530 | 32.7229 | 4.9179 | 31.0026 | 32.2617 | 5.4633 | -0.1496 | 0.4612 | -0.5454 | 0.7298 | -0.5454 | Z |

[A] Positive values denote deformation as inward toward the occupant compartment, negative values denote deformations outward away from the occupant compartment.

[B] Crush calculations that use multiple directional components will disregard components that are negative and only include positive values where the component is deforming inward toward the occupant compartment.

[C] Direction for Crush column denotes which directions are included in the crush calculations. If "NA" then no intrusion is recorded, and Crush will be 0.

**Pretest Floor Pan**

**Posttest Floor Pan**

Figure C-2. Floor Pan Deformation Data – Set 2, Test No. HP34-1

Model Year: 2016

Test Name: HP34
Make: Dodge

VIN: 1C6RR6LG3GS201339
Model: Ram 1500 crew cab

**VEHICLE DEFORMATION**
**PASSENGER SIDE INTERIOR CRUSH - SET 1**

| | POINT | Pretest X (in.) | Pretest Y (in.) | Pretest Z (in.) | Posttest X (in.) | Posttest Y (in.) | Posttest Z (in.) | ΔX[A] (in.) | ΔY[A] (in.) | ΔZ[A] (in.) | Total Δ (in.) | Crush[B] (in.) | Directions for Crush[C] |
|---|---|---|---|---|---|---|---|---|---|---|---|---|---|
| DASH (X, Y, Z) | 1 | 53.7083 | 49.7253 | -30.5512 | 53.6738 | 49.9124 | -30.9216 | 0.0345 | -0.1871 | -0.3704 | 0.4164 | 0.4164 | X, Y, Z |
| | 2 | 52.3170 | 35.9439 | -31.1384 | 52.3754 | 36.1131 | -31.4083 | -0.0584 | -0.1692 | -0.2699 | 0.3239 | 0.3239 | X, Y, Z |
| | 3 | 51.8046 | 20.8145 | -31.7817 | 51.9690 | 20.9431 | -31.9226 | -0.1644 | -0.1286 | -0.1409 | 0.2518 | 0.2518 | X, Y, Z |
| | 4 | 49.1756 | 50.4487 | -19.6062 | 48.7847 | 50.5819 | -20.2157 | 0.3909 | -0.1332 | -0.6095 | 0.7362 | 0.7362 | X, Y, Z |
| | 5 | 48.0184 | 37.2550 | -20.1007 | 47.8736 | 37.3571 | -20.5215 | 0.1448 | -0.1021 | -0.4208 | 0.4566 | 0.4566 | X, Y, Z |
| | 6 | 45.7973 | 19.9883 | -24.2734 | 45.8835 | 20.1478 | -24.4955 | -0.0862 | -0.1595 | -0.2221 | 0.2867 | 0.2867 | X, Y, Z |
| SIDE PANEL (Y) | 7 | 57.9648 | 52.0964 | -7.8685 | 56.9705 | 49.4226 | -8.2606 | 0.9943 | 2.6738 | -0.3921 | 2.8795 | 2.6738 | Y |
| | 8 | 57.8743 | 52.0410 | -3.4222 | 57.1275 | 49.5356 | -3.6018 | 0.7468 | 2.5054 | -0.1796 | 2.6205 | 2.5054 | Y |
| | 9 | 60.6556 | 52.0081 | -6.2286 | 59.6669 | 49.2924 | -6.5708 | 0.9887 | 2.7157 | -0.3422 | 2.9103 | 2.7157 | Y |
| IMPACT SIDE DOOR (Y) | 10 | 27.4188 | 54.6771 | -23.3244 | 26.4917 | 56.9918 | -23.2630 | 0.9271 | -2.3147 | 0.0614 | 2.4942 | -2.3147 | Y |
| | 11 | 33.9022 | 54.5287 | -23.5817 | 32.9702 | 56.4363 | -23.6372 | 0.9320 | -1.9076 | -0.0555 | 2.1238 | -1.9076 | Y |
| | 12 | 41.7752 | 55.5614 | -20.9419 | 40.8981 | 56.8408 | -21.0762 | 0.8771 | -1.2794 | -0.1343 | 1.5570 | -1.2794 | Y |
| | 13 | 24.5569 | 54.7779 | -8.5299 | 23.9035 | 55.6535 | -8.5277 | 0.6534 | -0.8756 | 0.0022 | 1.0925 | -0.8756 | Y |
| | 14 | 32.9153 | 55.3663 | -8.2779 | 32.0622 | 56.1633 | -8.3185 | 0.8531 | -0.7970 | -0.0406 | 1.1682 | -0.7970 | Y |
| | 15 | 42.7203 | 55.4395 | -7.5946 | 41.9041 | 55.3407 | -7.7564 | 0.8162 | 0.0988 | -0.1618 | 0.8379 | 0.0988 | Y |
| ROOF - (Z) | 16 | 44.2076 | 20.0612 | -47.1122 | 44.3644 | 20.4998 | -47.0977 | -0.1568 | -0.4386 | 0.0145 | 0.4660 | 0.0145 | Z |
| | 17 | 43.7226 | 32.6378 | -46.6295 | 43.8014 | 32.9198 | -46.7393 | -0.0788 | -0.2820 | -0.1098 | 0.3127 | -0.1098 | Z |
| | 18 | 41.1930 | 42.6125 | -46.2636 | 41.2637 | 42.9878 | -46.4477 | -0.0707 | -0.3753 | -0.1841 | 0.4240 | -0.1841 | Z |
| | 19 | 36.7852 | 20.1980 | -49.9481 | 37.0566 | 20.5342 | -49.9269 | -0.2714 | -0.3362 | 0.0212 | 0.4326 | 0.0212 | Z |
| | 20 | 35.9230 | 30.9227 | -49.7797 | 35.9740 | 31.2633 | -49.8775 | -0.0510 | -0.3406 | -0.0978 | 0.3580 | -0.0978 | Z |
| | 21 | 33.4797 | 41.2132 | -49.3682 | 33.5784 | 41.5994 | -49.5079 | -0.0987 | -0.3862 | -0.1397 | 0.4224 | -0.1397 | Z |
| | 22 | 23.8776 | 19.0332 | -51.1667 | 24.0462 | 19.3105 | -51.2200 | -0.1686 | -0.2773 | -0.0533 | 0.3289 | -0.0533 | Z |
| | 23 | 23.0504 | 28.9927 | -50.9979 | 23.2205 | 29.3176 | -51.0866 | -0.1701 | -0.3249 | -0.0887 | 0.3773 | -0.0887 | Z |
| | 24 | 22.4912 | 40.6981 | -50.3024 | 22.5064 | 40.9060 | -50.4168 | -0.0152 | -0.2079 | -0.1144 | 0.2378 | -0.1144 | Z |
| | 25 | 17.7521 | 19.3821 | -51.3869 | 17.8827 | 19.7065 | -51.4522 | -0.1306 | -0.3244 | -0.0653 | 0.3557 | -0.0653 | Z |
| | 26 | 17.8693 | 28.8445 | -51.1962 | 17.9075 | 29.0675 | -51.2899 | -0.0382 | -0.2230 | -0.0937 | 0.2449 | -0.0937 | Z |
| | 27 | 18.1748 | 40.6449 | -50.4674 | 18.2805 | 40.8882 | -50.5901 | -0.1057 | -0.2433 | -0.1227 | 0.2923 | -0.1227 | Z |
| | 28 | 4.4533 | 20.3112 | -51.5000 | 4.5689 | 20.5196 | -51.5872 | -0.1156 | -0.2084 | -0.0872 | 0.2538 | -0.0872 | Z |
| | 29 | 4.1767 | 30.9523 | -51.2578 | 4.3173 | 31.1341 | -51.3579 | -0.1406 | -0.1818 | -0.1001 | 0.2507 | -0.1001 | Z |
| | 30 | 4.7370 | 41.8613 | -50.6166 | 4.8438 | 42.0633 | -50.6971 | -0.1068 | -0.2020 | -0.0805 | 0.2423 | -0.0805 | Z |
| A-PILLAR Maximum (X, Y, Z) | 31 | 58.2694 | 51.1392 | -32.2499 | 58.2549 | 51.5915 | -32.4036 | 0.0145 | -0.4523 | -0.1537 | 0.4779 | 0.0145 | X |
| | 32 | 55.9227 | 50.6244 | -33.8579 | 56.0384 | 51.0064 | -34.1533 | -0.1157 | -0.3820 | -0.2954 | 0.4966 | 0.0000 | NA |
| | 33 | 53.0214 | 49.9547 | -36.0876 | 53.0807 | 50.3946 | -36.3529 | -0.0593 | -0.4399 | -0.2653 | 0.5171 | 0.0000 | NA |
| | 34 | 50.1753 | 49.4489 | -38.4611 | 50.2495 | 49.8716 | -38.6946 | -0.0742 | -0.4227 | -0.2335 | 0.4886 | 0.0000 | NA |
| | 35 | 45.9924 | 48.5225 | -40.9309 | 46.0678 | 48.9357 | -41.1320 | -0.0754 | -0.4132 | -0.2011 | 0.4657 | 0.0000 | NA |
| | 36 | 40.5715 | 47.4357 | -44.4182 | 40.6372 | 47.8352 | -44.6259 | -0.0657 | -0.3995 | -0.2077 | 0.4550 | 0.0000 | NA |
| A-PILLAR Lateral (Y) | 31 | 58.2694 | 51.1392 | -32.2499 | 58.2549 | 51.5915 | -32.4036 | 0.0145 | -0.4523 | -0.1537 | 0.4779 | -0.4523 | Y |
| | 32 | 55.9227 | 50.6244 | -33.8579 | 56.0384 | 51.0064 | -34.1533 | -0.1157 | -0.3820 | -0.2954 | 0.4966 | -0.3820 | Y |
| | 33 | 53.0214 | 49.9547 | -36.0876 | 53.0807 | 50.3946 | -36.3529 | -0.0593 | -0.4399 | -0.2653 | 0.5171 | -0.4399 | Y |
| | 34 | 50.1753 | 49.4489 | -38.4611 | 50.2495 | 49.8716 | -38.6946 | -0.0742 | -0.4227 | -0.2335 | 0.4886 | -0.4227 | Y |
| | 35 | 45.9924 | 48.5225 | -40.9309 | 46.0678 | 48.9357 | -41.1320 | -0.0754 | -0.4132 | -0.2011 | 0.4657 | -0.4132 | Y |
| | 36 | 40.5715 | 47.4357 | -44.4182 | 40.6372 | 47.8352 | -44.6259 | -0.0657 | -0.3995 | -0.2077 | 0.4550 | -0.3995 | Y |
| B-PILLAR Maximum (X, Y, Z) | 37 | 16.7357 | 47.8375 | -45.2933 | 16.8684 | 48.0798 | -45.3442 | -0.1327 | -0.2423 | -0.0509 | 0.2809 | 0.0000 | NA |
| | 38 | 14.3689 | 50.9086 | -36.9109 | 14.3560 | 50.9329 | -36.8966 | 0.0129 | -0.0243 | 0.0143 | 0.0310 | 0.0193 | X, Z |
| | 39 | 17.6015 | 51.7656 | -33.4592 | 17.6216 | 51.7714 | -33.4930 | -0.0201 | -0.0058 | -0.0338 | 0.0398 | 0.0000 | NA |
| | 40 | 14.6510 | 52.4575 | -28.3671 | 14.6565 | 52.3151 | -28.3703 | -0.0055 | 0.1424 | -0.0032 | 0.1425 | 0.1424 | Y |
| B-PILLAR Lateral (Y) | 37 | 16.7357 | 47.8375 | -45.2933 | 16.8684 | 48.0798 | -45.3442 | -0.1327 | -0.2423 | -0.0509 | 0.2809 | -0.2423 | Y |
| | 38 | 14.3689 | 50.9086 | -36.9109 | 14.3560 | 50.9329 | -36.8966 | 0.0129 | -0.0243 | 0.0143 | 0.0310 | -0.0243 | Y |
| | 39 | 17.6015 | 51.7656 | -33.4592 | 17.6216 | 51.7714 | -33.4930 | -0.0201 | -0.0058 | -0.0338 | 0.0398 | -0.0058 | Y |
| | 40 | 14.6510 | 52.4575 | -28.3671 | 14.6565 | 52.3151 | -28.3703 | -0.0055 | 0.1424 | -0.0032 | 0.1425 | 0.1424 | Y |

[A] Positive values denote deformation as inward toward the occupant compartment, negative values denote deformations outward away from the occupant compartment.

[B] Crush calculations that use multiple directional components will disregard components that are negative and only include positive values where the component is deforming inward toward the occupant compartment.

[C] Direction for Crush column denotes which directions are included in the crush calculations. If "NA" then no intrusion is recorded, and Crush will be 0.

Figure C-3. Occupant Compartment Deformation Data – Set 1, Test No. HP34-1

Model Year: 2016

Test Name: HP34
Make: Dodge

VIN: 1C6RR6LG3GS201339
Model: Ram 1500 crew cab

**VEHICLE DEFORMATION**
**PASSENGER SIDE INTERIOR CRUSH - SET 2**

| | POINT | Pretest X (in.) | Pretest Y (in.) | Pretest Z (in.) | Posttest X (in.) | Posttest Y (in.) | Posttest Z (in.) | ΔX[A] (in.) | ΔY[A] (in.) | ΔZ[A] (in.) | Total Δ (in.) | Crush[B] (in.) | Directions for Crush[C] |
|---|---|---|---|---|---|---|---|---|---|---|---|---|---|
| DASH (X, Y, Z) | 1 | 43.5795 | 34.7380 | -26.1353 | 43.9535 | 34.7445 | -26.2037 | -0.3740 | -0.0065 | -0.0684 | 0.3803 | 0.3803 | X, Y, Z |
| | 2 | 42.5806 | 20.9202 | -26.6603 | 42.9497 | 20.9204 | -26.6830 | -0.3691 | -0.0002 | -0.0227 | 0.3698 | 0.3698 | X, Y, Z |
| | 3 | 42.4985 | 5.7791 | -27.2246 | 42.8665 | 5.7444 | -27.1733 | -0.3680 | 0.0347 | 0.0513 | 0.3732 | 0.3732 | X, Y, Z |
| | 4 | 38.9106 | 35.3919 | -15.2433 | 38.8873 | 35.3300 | -15.5755 | 0.0233 | 0.0619 | -0.3322 | 0.3387 | 0.3387 | X, Y, Z |
| | 5 | 38.1282 | 22.1685 | -15.6765 | 38.2560 | 22.0886 | -15.8691 | -0.1278 | 0.0799 | -0.1926 | 0.2446 | 0.2446 | X, Y, Z |
| | 6 | 36.4360 | 4.8246 | -19.7761 | 36.6852 | 4.8350 | -19.8390 | -0.2492 | -0.0104 | -0.0629 | 0.2572 | 0.2572 | X, Y, Z |
| SIDE PANEL (Y) | 7 | 47.5230 | 37.3472 | -3.4221 | 46.9104 | 34.3610 | -3.4939 | 0.6126 | 2.9862 | -0.0718 | 3.0492 | 2.9862 | Y |
| | 8 | 47.3861 | 37.3128 | 1.0232 | 46.9932 | 34.4851 | 1.1666 | 0.3929 | 2.8277 | 0.1434 | 2.8585 | 2.8277 | Y |
| | 9 | 50.1974 | 37.3430 | -1.7533 | 49.5826 | 34.2898 | -1.7626 | 0.6148 | 3.0532 | -0.0093 | 3.1145 | 3.0532 | Y |
| IMPACT SIDE DOOR (Y) | 10 | 17.0854 | 38.9892 | -19.2164 | 16.5155 | 41.2697 | -18.9776 | 0.5699 | -2.2805 | 0.2388 | 2.3627 | -2.2805 | Y |
| | 11 | 23.5728 | 39.0212 | -19.4038 | 23.0092 | 40.8484 | -19.2512 | 0.5636 | -1.8272 | 0.1526 | 1.9182 | -1.8272 | Y |
| | 12 | 31.3849 | 40.2881 | -16.6862 | 30.8866 | 41.4220 | -16.5695 | 0.4983 | -1.1339 | 0.1167 | 1.2440 | -1.1339 | Y |
| | 13 | 14.0623 | 39.0879 | -4.4539 | 13.7291 | 39.9023 | -4.2811 | 0.3332 | -0.8144 | 0.1728 | 0.8967 | -0.8144 | Y |
| | 14 | 22.3977 | 39.9116 | -4.1163 | 21.8713 | 40.5821 | -3.9477 | 0.5264 | -0.6705 | 0.1686 | 0.8690 | -0.6705 | Y |
| | 15 | 32.1889 | 40.2632 | -3.3291 | 31.7183 | 39.9653 | -3.2329 | 0.4706 | 0.2979 | 0.0962 | 0.5652 | 0.2979 | Y |
| ROOF - (Z) | 16 | 35.0914 | 4.7323 | -42.6307 | 35.5073 | 5.1177 | -42.4625 | -0.4159 | -0.3854 | 0.1682 | 0.5914 | 0.1682 | Z |
| | 17 | 34.2497 | 17.2927 | -42.2233 | 34.6810 | 17.5239 | -42.1374 | -0.4313 | -0.2312 | 0.0859 | 0.4968 | 0.0859 | Z |
| | 18 | 31.4384 | 27.1945 | -41.9400 | 31.9305 | 27.5374 | -41.9049 | -0.4921 | -0.3429 | 0.0351 | 0.6008 | 0.0351 | Z |
| | 19 | 27.6991 | 4.6461 | -45.5461 | 28.2449 | 4.9954 | -45.4037 | -0.5458 | -0.3493 | 0.1424 | 0.6635 | 0.1424 | Z |
| | 20 | 26.5356 | 15.3432 | -45.4467 | 26.9390 | 15.6997 | -45.3922 | -0.4034 | -0.3565 | 0.0545 | 0.5411 | 0.0545 | Z |
| | 21 | 23.8012 | 25.5632 | -45.1186 | 24.3238 | 25.9844 | -45.0800 | -0.5226 | -0.4212 | 0.0386 | 0.6723 | 0.0386 | Z |
| | 22 | 14.8430 | 3.1136 | -46.8955 | 15.2841 | 3.4992 | -46.8941 | -0.4411 | -0.3856 | 0.0014 | 0.5859 | 0.0014 | Z |
| | 23 | 13.7358 | 13.0467 | -46.7910 | 14.2487 | 13.4871 | -46.7932 | -0.5129 | -0.4404 | -0.0022 | 0.6760 | -0.0022 | Z |
| | 24 | 12.8421 | 24.7354 | -46.1668 | 13.2839 | 25.0593 | -46.1574 | -0.4418 | -0.3239 | 0.0094 | 0.5479 | 0.0094 | Z |
| | 25 | 8.7129 | 3.2896 | -47.1828 | 9.1180 | 3.7664 | -47.2217 | -0.4051 | -0.4768 | -0.0389 | 0.6269 | -0.0389 | Z |
| | 26 | 8.5634 | 12.7524 | -47.0436 | 8.9458 | 13.1262 | -47.0776 | -0.3824 | -0.3738 | -0.0340 | 0.5358 | -0.0340 | Z |
| | 27 | 8.5308 | 24.5604 | -46.3774 | 9.0624 | 24.9533 | -46.3956 | -0.5316 | -0.3929 | -0.0182 | 0.6613 | -0.0182 | Z |
| | 28 | -4.6046 | 3.8450 | -47.4425 | -4.2061 | 4.3022 | -47.5627 | -0.3985 | -0.4572 | -0.1202 | 0.6183 | -0.1202 | Z |
| | 29 | -5.1814 | 14.4752 | -47.2627 | -4.6817 | 14.9095 | -47.3584 | -0.4997 | -0.4343 | -0.0957 | 0.6689 | -0.0957 | Z |
| | 30 | -4.9333 | 25.3989 | -46.6764 | -4.3926 | 25.8484 | -46.7113 | -0.5407 | -0.4495 | -0.0349 | 0.7040 | -0.0349 | Z |
| A-PILLAR Maximum (X, Y, Z) | 31 | 48.1174 | 36.2702 | -27.7932 | 48.5210 | 36.5161 | -27.6186 | -0.4036 | -0.2459 | 0.1746 | 0.5038 | 0.1746 | Z |
| | 32 | 45.8035 | 35.6814 | -29.4231 | 46.3443 | 35.8821 | -29.4009 | -0.5408 | -0.2007 | 0.0222 | 0.5773 | 0.0222 | Z |
| | 33 | 42.9463 | 34.9189 | -31.6799 | 43.4343 | 35.2053 | -31.6445 | -0.4880 | -0.2864 | 0.0354 | 0.5669 | 0.0354 | Z |
| | 34 | 40.1412 | 34.3210 | -34.0806 | 40.6509 | 34.6195 | -34.0284 | -0.5097 | -0.2985 | 0.0522 | 0.5930 | 0.0522 | Z |
| | 35 | 36.0128 | 33.2647 | -36.5896 | 36.5276 | 33.5928 | -36.5278 | -0.5148 | -0.3281 | 0.0618 | 0.6136 | 0.0618 | Z |
| | 36 | 30.6624 | 32.0080 | -40.1282 | 31.1754 | 32.3738 | -40.1025 | -0.5130 | -0.3658 | 0.0257 | 0.6306 | 0.0257 | Z |
| A-PILLAR Lateral (Y) | 31 | 48.1174 | 36.2702 | -27.7932 | 48.5210 | 36.5161 | -27.6186 | -0.4036 | -0.2459 | 0.1746 | 0.5038 | -0.2459 | Y |
| | 32 | 45.8035 | 35.6814 | -29.4231 | 46.3443 | 35.8821 | -29.4009 | -0.5408 | -0.2007 | 0.0222 | 0.5773 | -0.2007 | Y |
| | 33 | 42.9463 | 34.9189 | -31.6799 | 43.4343 | 35.2053 | -31.6445 | -0.4880 | -0.2864 | 0.0354 | 0.5669 | -0.2864 | Y |
| | 34 | 40.1412 | 34.3210 | -34.0806 | 40.6509 | 34.6195 | -34.0284 | -0.5097 | -0.2985 | 0.0522 | 0.5930 | -0.2985 | Y |
| | 35 | 36.0128 | 33.2647 | -36.5896 | 36.5276 | 33.5928 | -36.5278 | -0.5148 | -0.3281 | 0.0618 | 0.6136 | -0.3281 | Y |
| | 36 | 30.6624 | 32.0080 | -40.1282 | 31.1754 | 32.3738 | -40.1025 | -0.5130 | -0.3658 | 0.0257 | 0.6306 | -0.3658 | Y |
| B-PILLAR Maximum (X, Y, Z) | 37 | 6.8354 | 31.7371 | -41.2592 | 7.4206 | 32.1226 | -41.1862 | -0.5852 | -0.3855 | 0.0730 | 0.7046 | 0.0730 | Z |
| | 38 | 4.2933 | 34.7848 | -32.9197 | 4.7197 | 34.9370 | -32.7839 | -0.4264 | -0.1522 | 0.1358 | 0.4727 | 0.1358 | Z |
| | 39 | 7.4632 | 35.7503 | -29.4386 | 7.9144 | 35.8488 | -29.3322 | -0.4512 | -0.0985 | 0.1064 | 0.4739 | 0.1064 | Z |
| | 40 | 4.4398 | 36.3861 | -24.3821 | 4.8601 | 36.3393 | -24.2568 | -0.4203 | 0.0468 | 0.1253 | 0.4411 | 0.1338 | Y, Z |
| B-PILLAR Lateral (Y) | 37 | 6.8354 | 31.7371 | -41.2592 | 7.4206 | 32.1226 | -41.1862 | -0.5852 | -0.3855 | 0.0730 | 0.7046 | -0.3855 | Y |
| | 38 | 4.2933 | 34.7848 | -32.9197 | 4.7197 | 34.9370 | -32.7839 | -0.4264 | -0.1522 | 0.1358 | 0.4727 | -0.1522 | Y |
| | 39 | 7.4632 | 35.7503 | -29.4386 | 7.9144 | 35.8488 | -29.3322 | -0.4512 | -0.0985 | 0.1064 | 0.4739 | -0.0985 | Y |
| | 40 | 4.4398 | 36.3861 | -24.3821 | 4.8601 | 36.3393 | -24.2568 | -0.4203 | 0.0468 | 0.1253 | 0.4411 | 0.0468 | Y |

[A] Positive values denote deformation as inward toward the occupant compartment, negative values denote deformations outward away from the occupant compartment.

[B] Crush calculations that use multiple directional components will disregard components that are negative and only include positive values where the component is deforming inward toward the occupant compartment.

[C] Direction for Crush column denotes which directions are included in the crush calculations. If "NA" then no intrusion is recorded, and Crush will be 0.

Figure C-4. Occupant Compartment Deformation Data – Set 2, Test No. HP34-1

Test Name: HP34 VIN: 1C6RR6LG3GS201339

Model Year: 2016 Make: Dodge Model: Ram 1500 crew cab

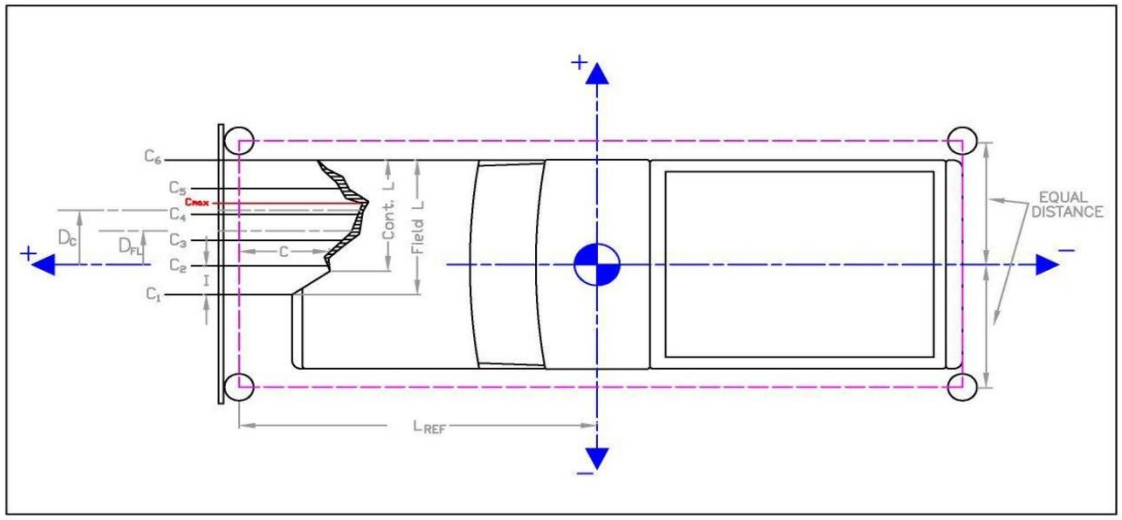


| | in. | (mm) |
|---|---|---|
| Distance from C.G. to reference line - $L_{REF}$: | 117 1/2 | (2985) |
| Total Vehicle Width: | 77 1/4 | (1962) |
| Width of contact and induced crush - Field L: | 38 5/8 | (981) |
| Crush measurement spacing interval (L/5) - I: | 7 3/4 | (197) |
| Distance from center of vehicle to center of Field L - $D_{FL}$: | 19 1/3 | (491) |
| Width of Contact Damage: | 19 1/3 | (491) |
| Distance from center of vehicle to center of contact damage - $D_C$: | 29 1/6 | (741) |

NOTE: Enter "NA" for crush measurement if distance can not be measured (i.e., side of vehicle has been pushed inward)
NOTE: All values must be filled out above before crush measurements are filled out.

| | Crush Measurement | | Lateral Location | | Original Profile Measurement | | Dist. Between Ref. Lines | | Actual Crush | |
|---|---|---|---|---|---|---|---|---|---|---|
| | in. | (mm) | in. | (mm) | in. | (mm) | in. | (mm) | in. | (mm) |
| $C_1$ | 12 1/4 | (311) | 0 | () | 4 | (102) | 8 3/8 | (213) | - 1/8 | -(3) |
| $C_2$ | 13 7/8 | (352) | 7 3/4 | (197) | 4 1/4 | (108) | | | 1 1/4 | (32) |
| $C_3$ | 18 1/4 | (464) | 15 1/2 | (394) | 5 | (127) | | | 4 7/8 | (124) |
| $C_4$ | 31 5/8 | (803) | 23 1/4 | (591) | 6 1/4 | (159) | | | 17 | (432) |
| $C_5$ | N/A | N/A | 31 | (787) | 10 1/8 | (257) | | | N/A | N/A |
| $C_6$ | N/A | N/A | 38 3/4 | (984) | 20 1/2 | (521) | | | N/A | N/A |
| $C_{MAX}$ | 31 5/8 | (803) | 23 1/4 | (591) | 6 1/4 | (159) | | | 17 | (432) |

Figure C-5. Exterior Vehicle Crush (NASS) - Front, Test No. HP34-1

Test Name: HP34 VIN: 1C6RR6LG3GS201339

Model Year: 2016 Make: Dodge Model: Ram 1500 crew cab

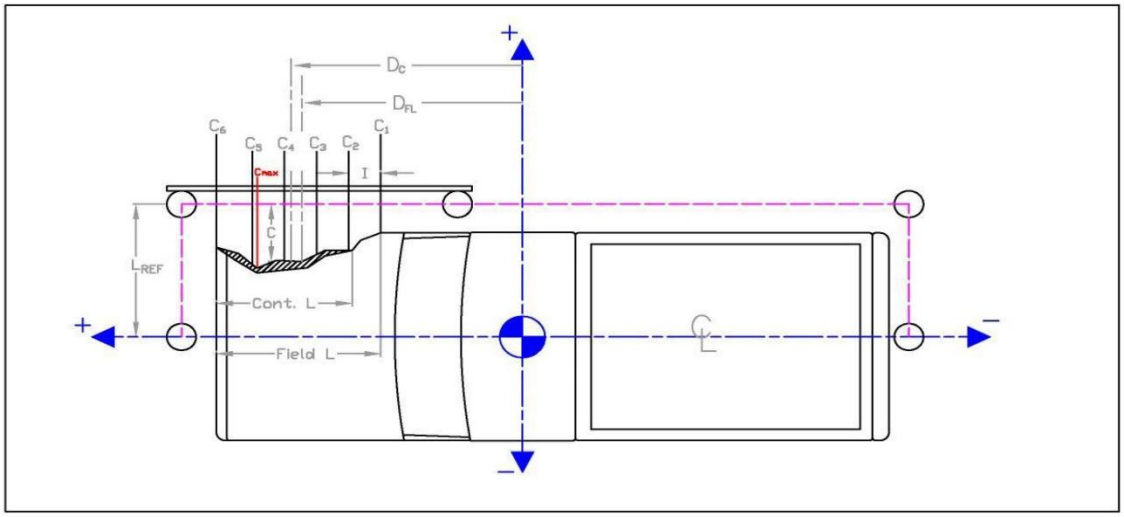


| | in. | (mm) |
|---|---|---|
| Distance from centerline to reference line - $L_{REF}$: | 47 | (1194) |
| Total Vehicle Length: | 229 1/2 | (5829) |
| Distance from vehicle c.g. to 1/2 of Vehicle total length: | -8 3/4 | -(222) |
| Width of contact and induced crush - Field L: | 229 1/2 | (5829) |
| Crush measurement spacing interval (L/5) - I: | 45 7/8 | (1165) |
| Distance from vehicle c.g. to center of Field L - $D_{FL}$: | -8 3/4 | -(222) |
| Width of Contact Damage: | 229 1/2 | (5829) |
| Distance from vehicle c.g. to center of contact damage - $D_C$: | -8 3/4 | -(222) |

NOTE: Enter "NA" for crush measurement if distance can not be measured (i.e., front of vehicle has been pushed inward or tire has been removed)

NOTE: All values must be filled out above before crush measurements are filled out.

| | Crush Measurement | | Longitudinal Location | | Original Profile Measurement | | Dist. Between Ref. Lines | | Actual Crush | |
|---|---|---|---|---|---|---|---|---|---|---|
| | in. | (mm) | in. | (mm) | in. | (mm) | in. | (mm) | in. | (mm) |
| $C_1$ | N/A | N/A | -123 1/2 | -(3137) | 33 1/2 | (851) | 3 | (76) | N/A | N/A |
| $C_2$ | N/A | N/A | -77 5/8 | -(1972) | 5 1/2 | (140) | | | N/A | N/A |
| $C_3$ | 5 1/2 | (140) | -31 3/4 | -(806) | 5 7/8 | (149) | | | -3 3/8 | -(86) |
| $C_4$ | 8 1/8 | (206) | 14 1/8 | (359) | 5 | (127) | | | 1/8 | (3) |
| $C_5$ | N/A | N/A | 60 | (1524) | 5 3/4 | (146) | | | N/A | N/A |
| $C_6$ | N/A | N/A | 105 7/8 | (2689) | 10 3/4 | (273) | | | N/A | N/A |
| $C_{MAX}$ | 32 1/2 | (826) | 84 | (2134) | 5 1/8 | (130) | | | 24 3/8 | (619) |

Figure C-6. Exterior Vehicle Crush (NASS) - Side, Test No. HP34-1

# Appendix D. Accelerometer and Rate Transducer Data Plots, Test No. HP34-1

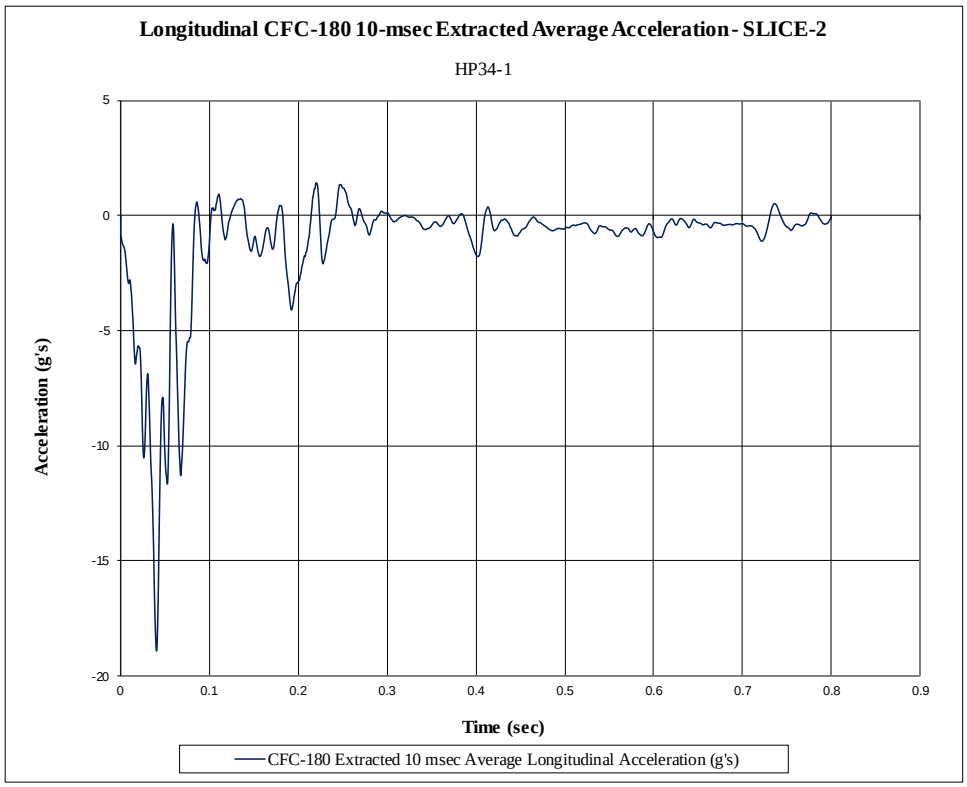


Figure D-1. 10-ms Average Longitudinal Deceleration (SLICE-2, Primary), Test No. HP34-1

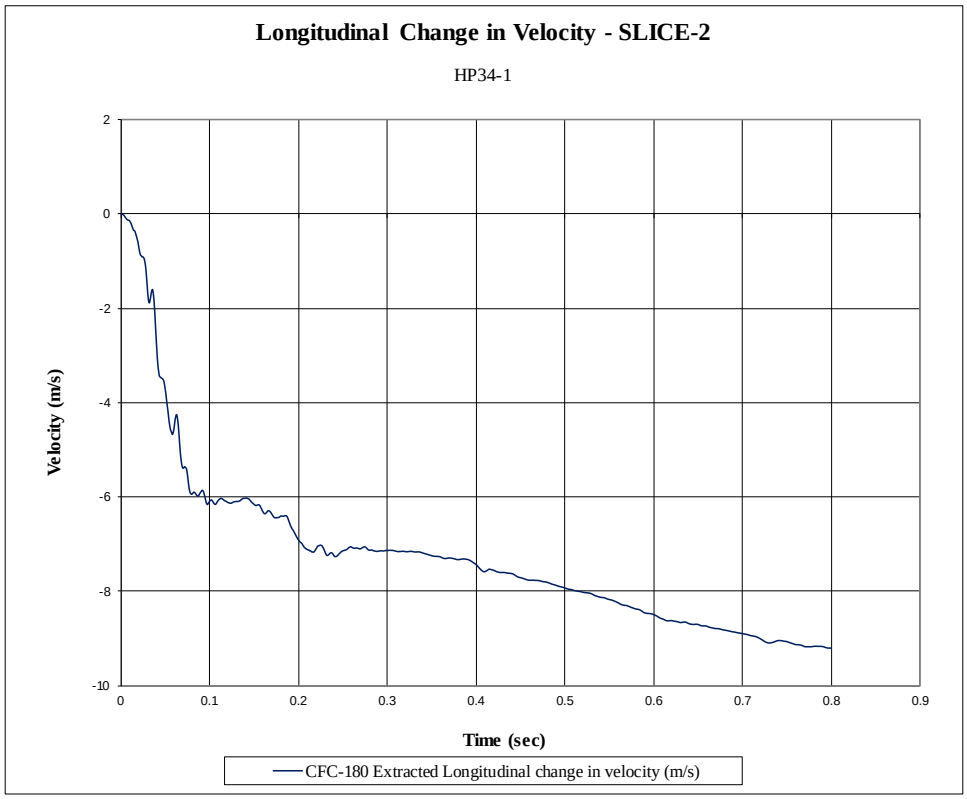


Figure D-2. Longitudinal Occupant Impact Velocity (SLICE-2, Primary), Test No. HP34-1

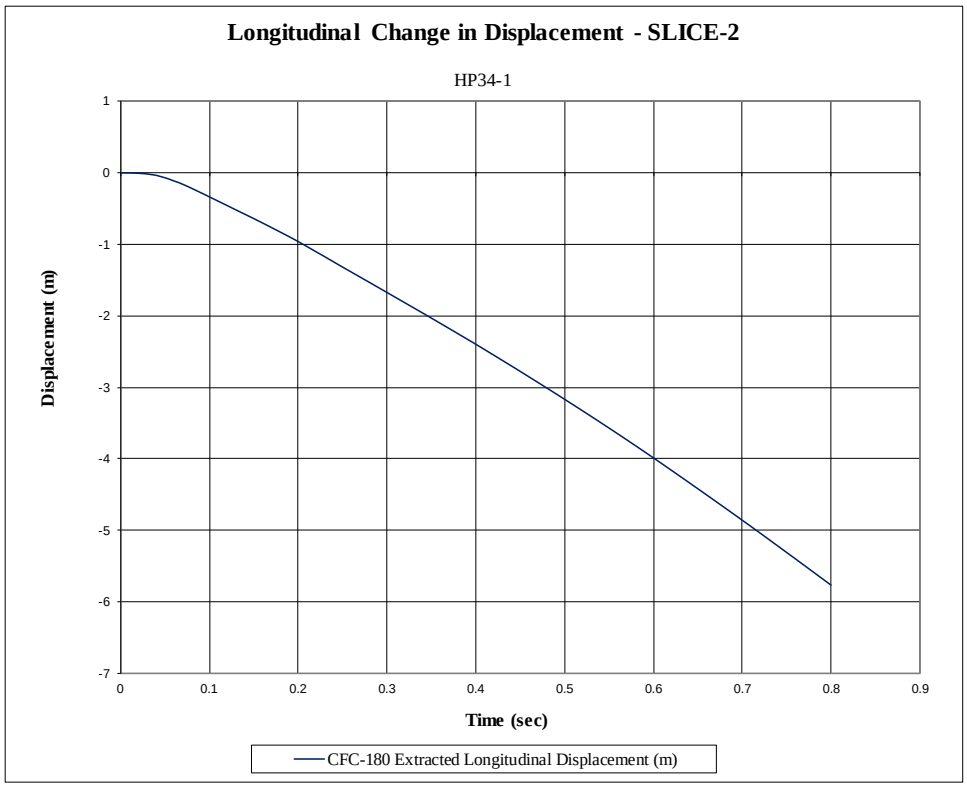


Figure D-3. Longitudinal Occupant Displacement (SLICE-2, Primary), Test No. HP34-1

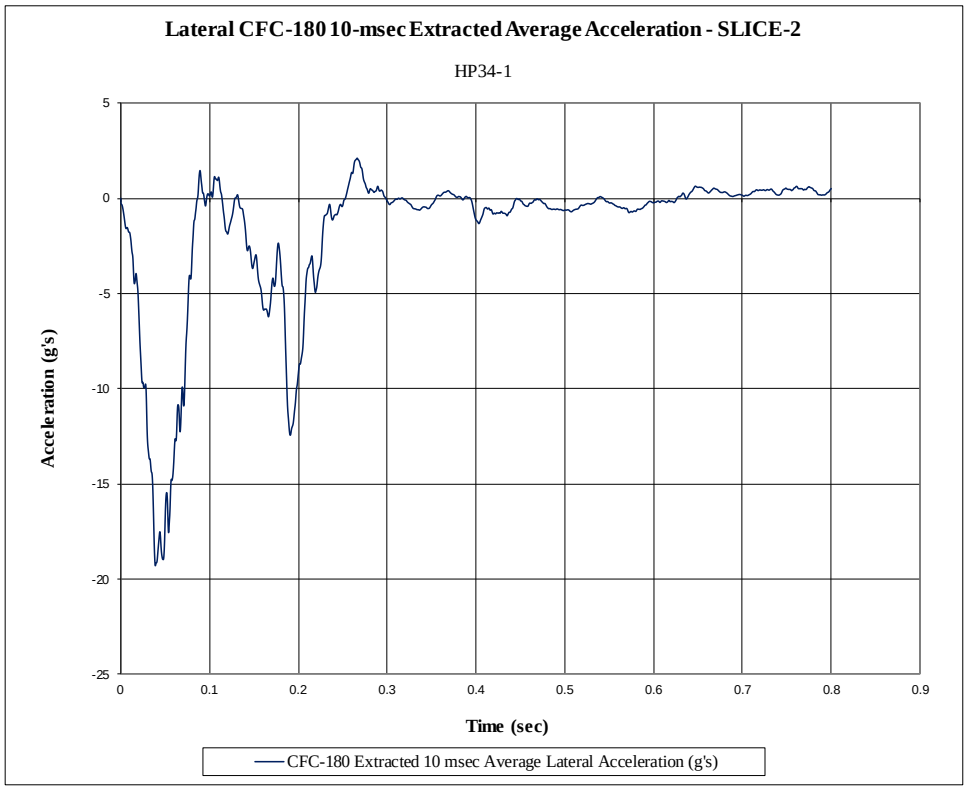


Figure D-4. 10-ms Average Lateral Deceleration (SLICE-2, Primary), Test No. HP34-1

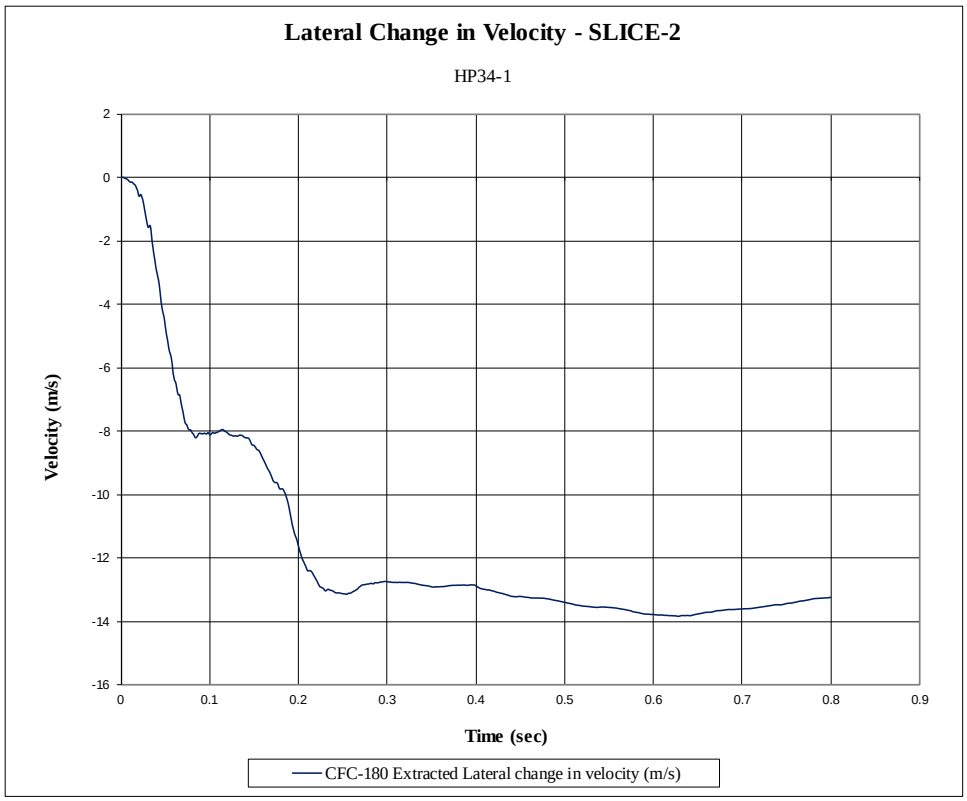


Figure D-5. Lateral Occupant Impact Velocity (SLICE-2, Primary), Test No. HP34-1

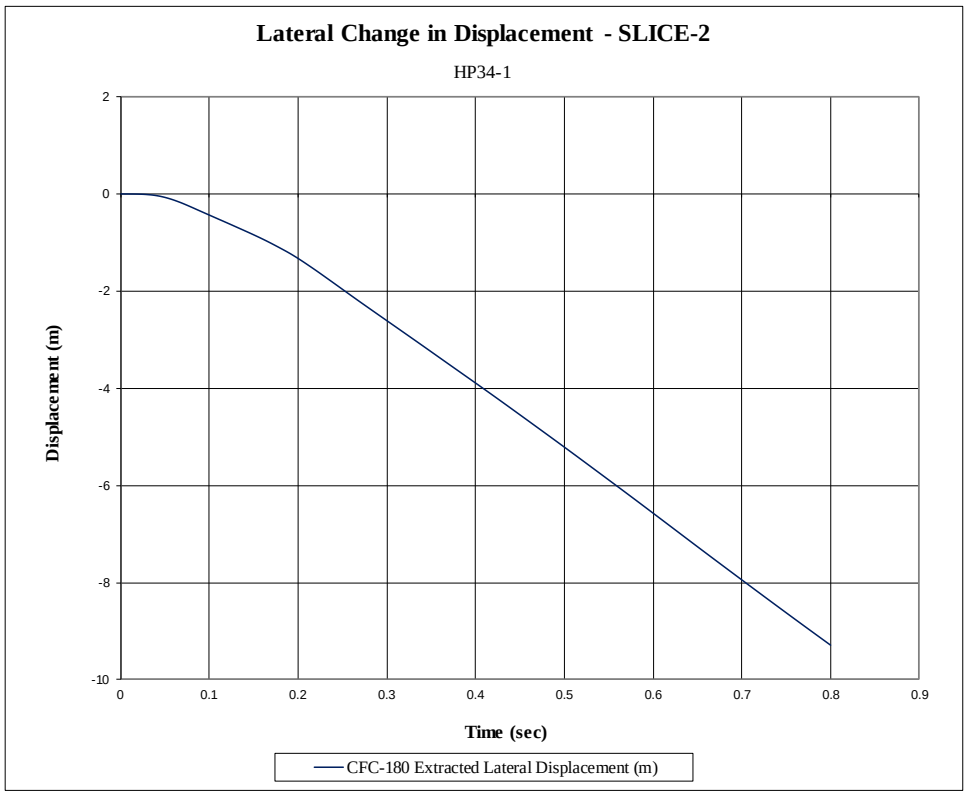


Figure D-6. Lateral Occupant Displacement (SLICE-2, Primary), Test No. HP34-1

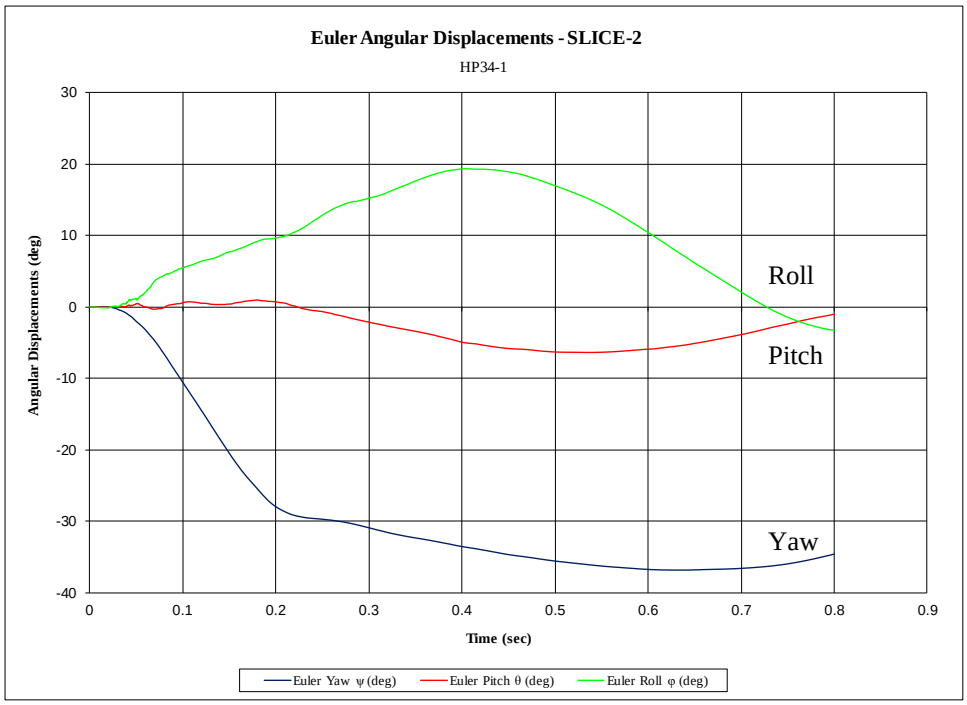


Figure D-7. Vehicle Angular Displacements (SLICE-2, Primary), Test No. HP34-1

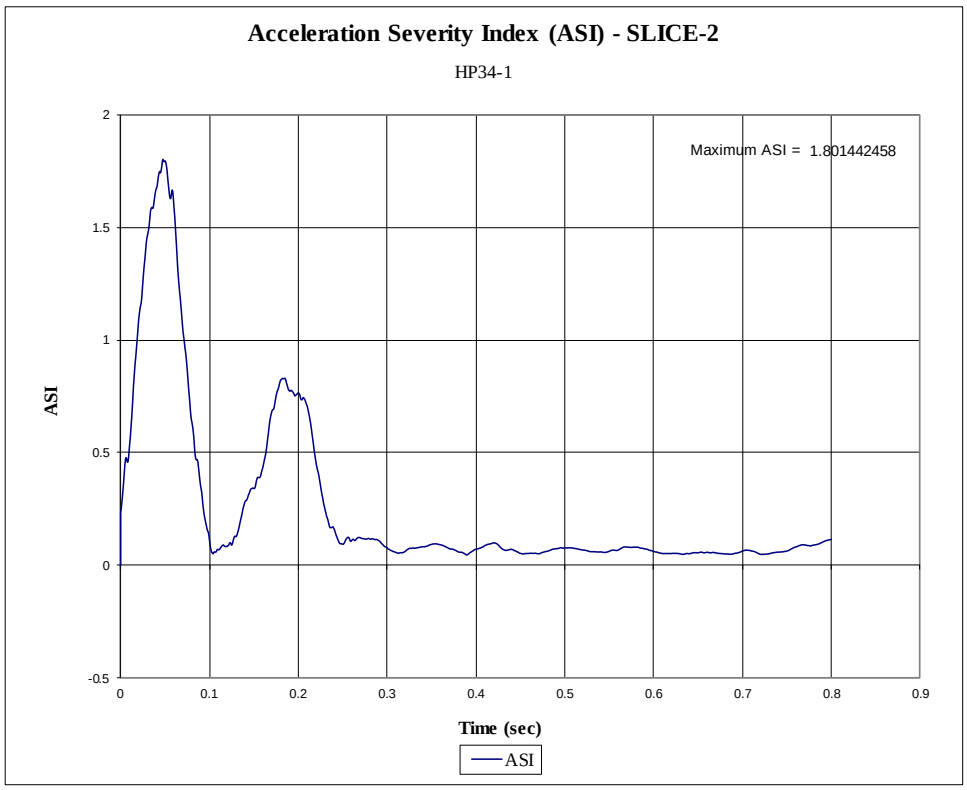


Figure D-8. Acceleration Severity Index (SLICE-2, Primary), Test No. HP34-1

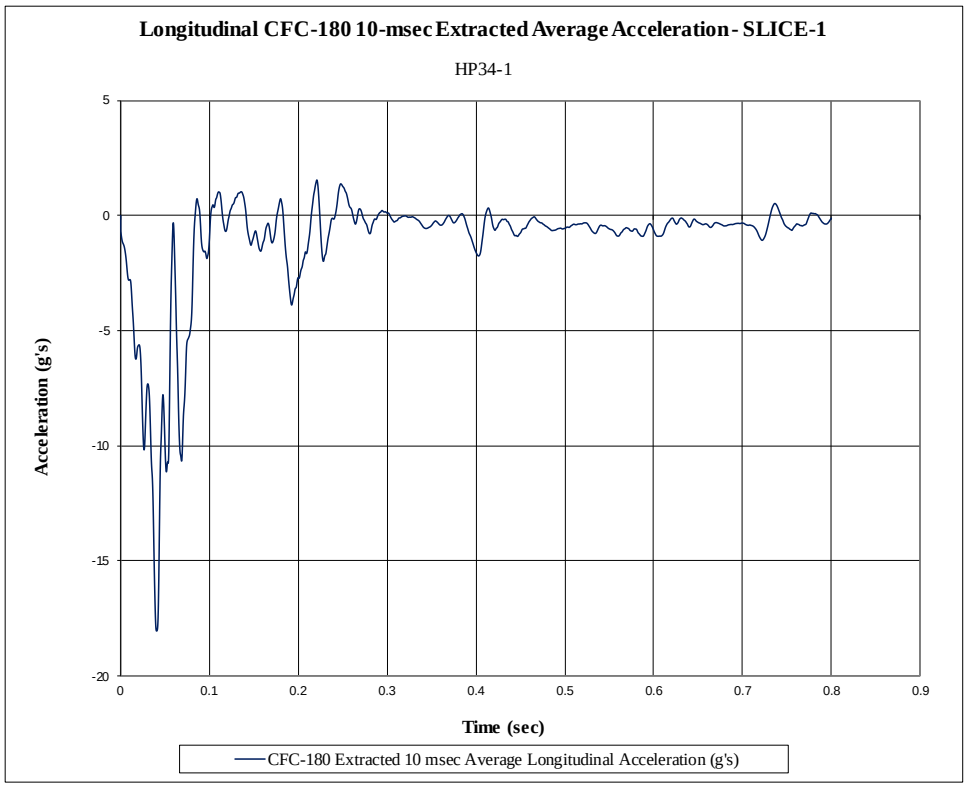


Figure D-9. 10-ms Average Longitudinal Deceleration (SLICE-1), Test No. HP34-1

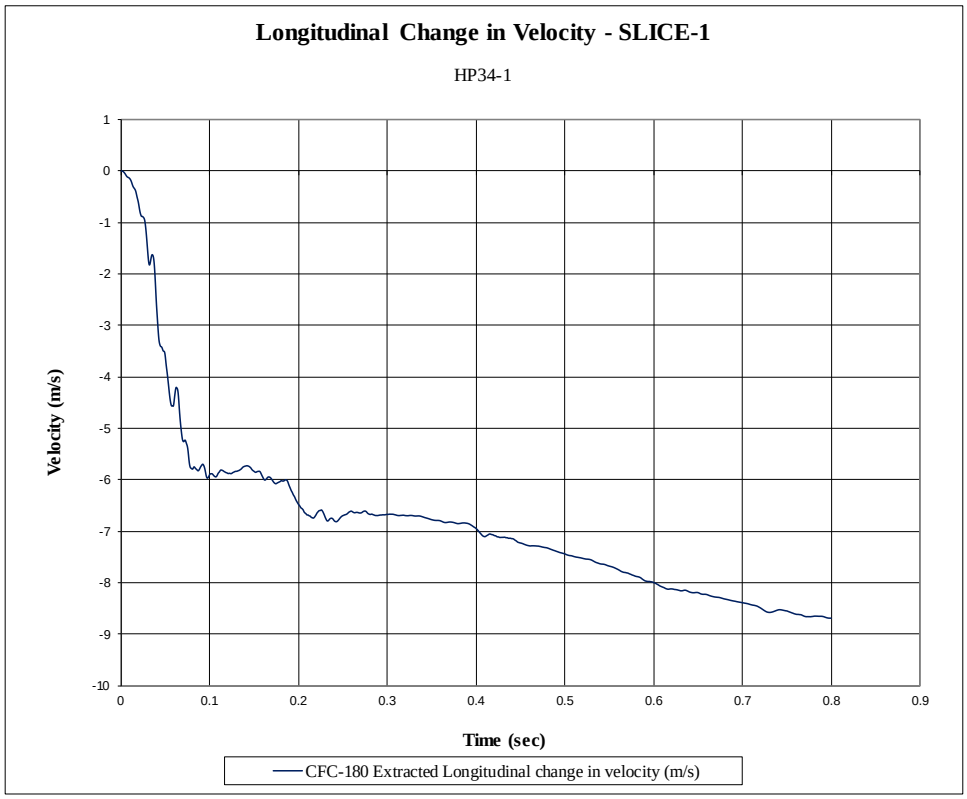


Figure D-10. Longitudinal Occupant Impact Velocity (SLICE-1), Test No. HP34-1

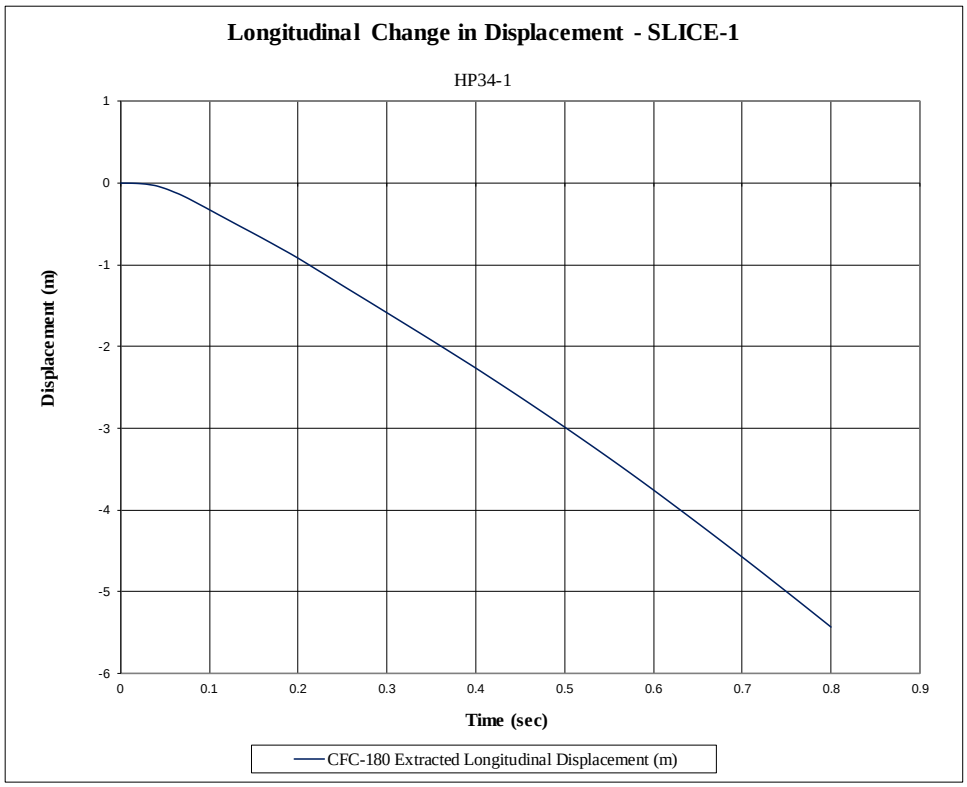


Figure D-11. Longitudinal Occupant Displacement (SLICE-1), Test No. HP34-1

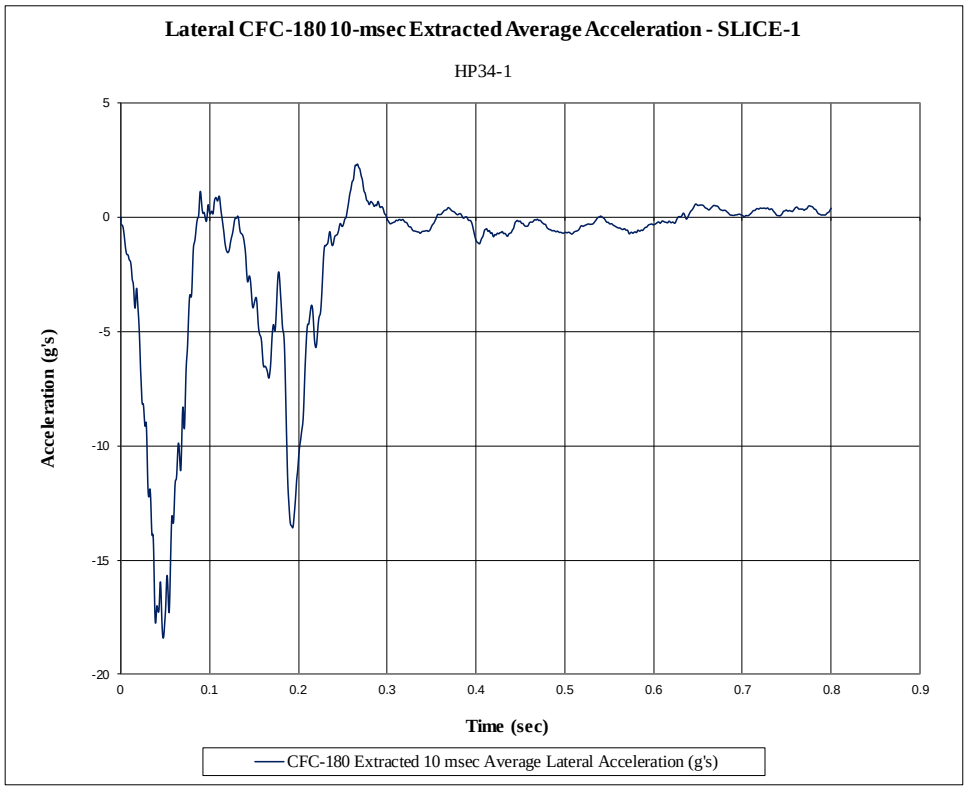


Figure D-12. 10-ms Average Lateral Deceleration (SLICE-1), Test No. HP34-1

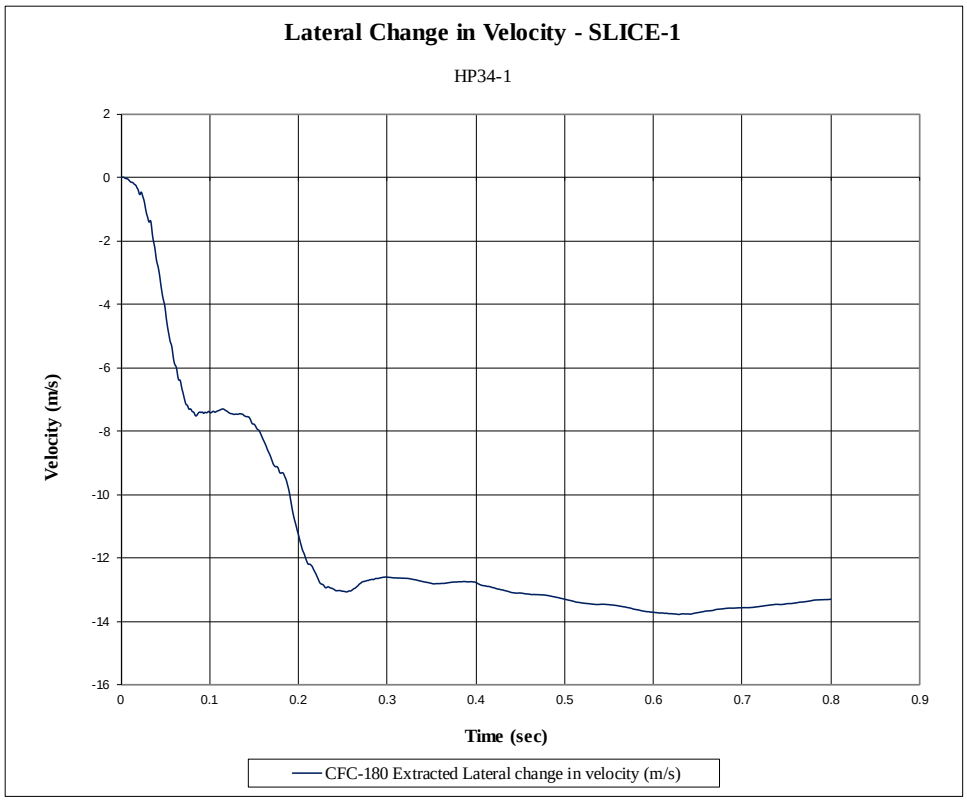


Figure D-13. Lateral Occupant Impact Velocity (SLICE-1), Test No. HP34-1

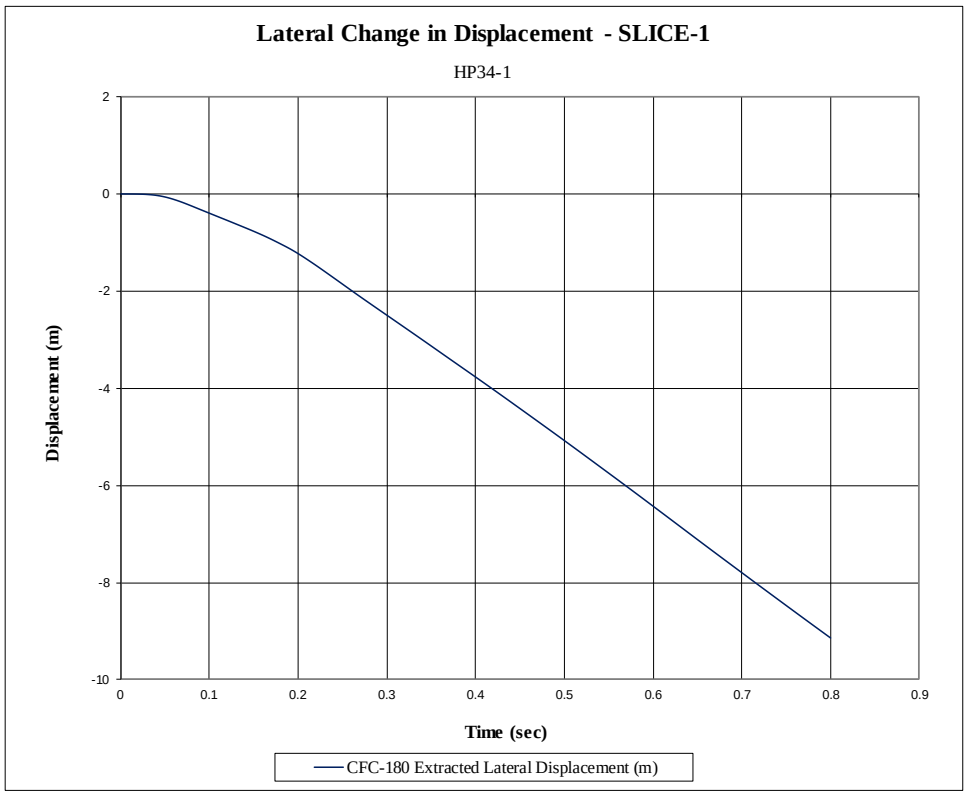


Figure D-14. Lateral Occupant Displacement (SLICE-1), Test No. HP34-1

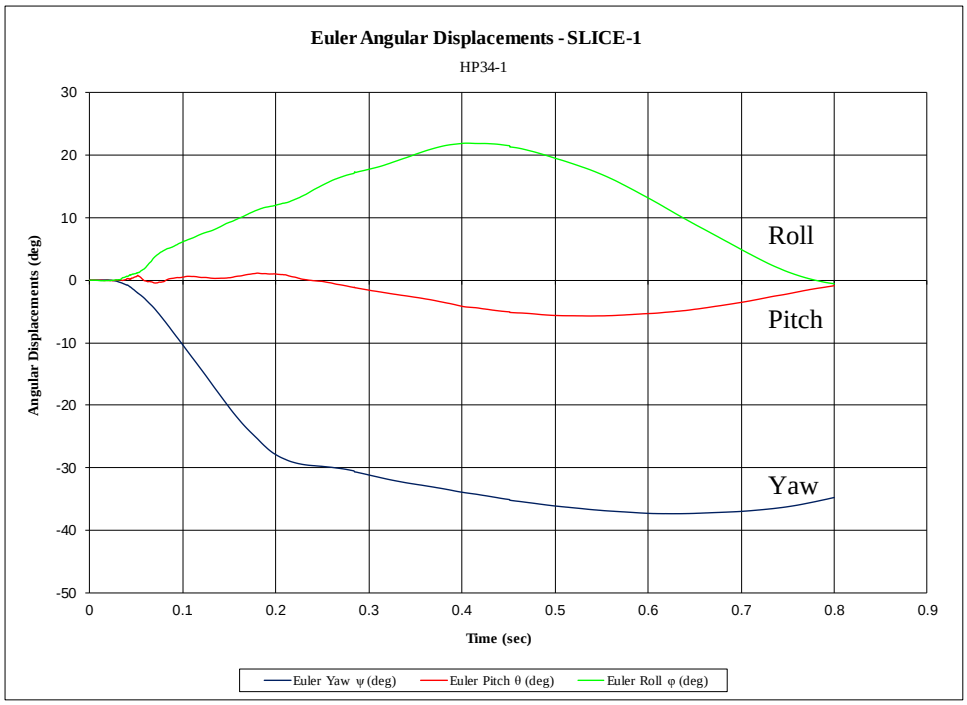


Figure D-15. Vehicle Angular Displacements (SLICE-1), Test No. HP34-1

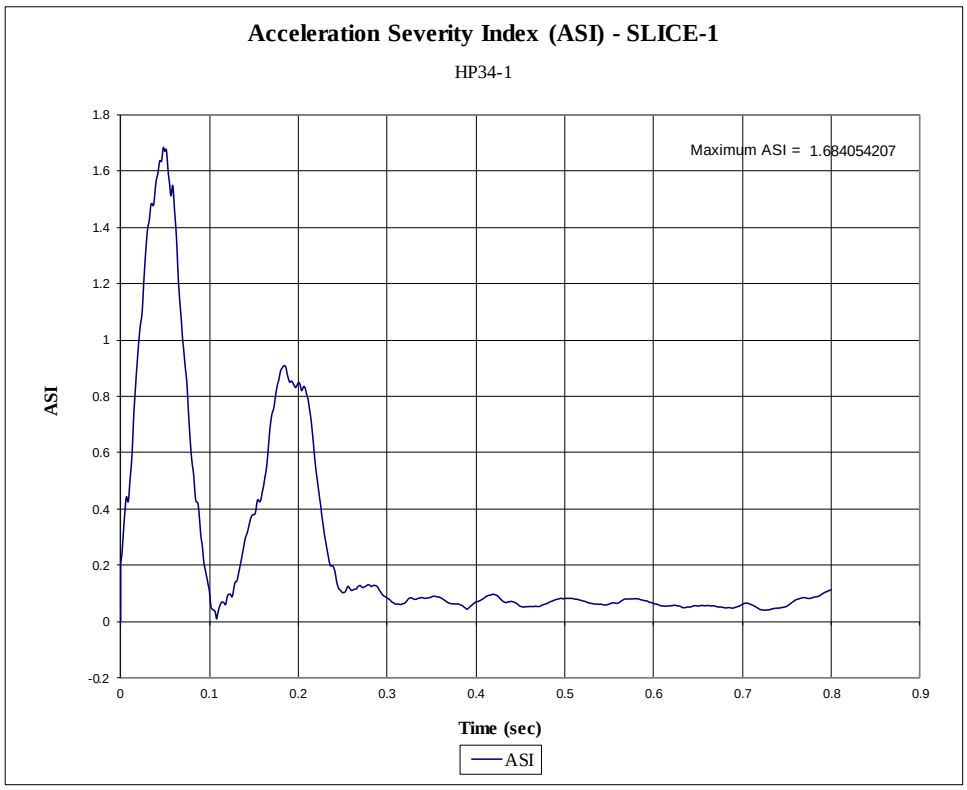


Figure D-16. Acceleration Severity Index (SLICE-1), Test No. HP34-1

# END OF DOCUMENT