ISO 17025 LABORATORY
TESTING CERT # 2937.01

Research Project Number TPF-5(193) Supplement #88

PERFORMANCE EVALUATION OF NEW JERSEY'S PORTABLE CONCRETE BARRIER WITH A BOLTED CONFIGURATION AND GROUTED TOES – TEST NO. NJPCB-2

Submitted by

Surajkumar K. Bhakta, M.S.M.E.
Former Graduate Research Assistant

Karla A. Lechtenberg, M.S.M.E., E.I.T.
Research Engineer

Ronald K. Faller, Ph.D., P.E.
Research Professor
MwRSF Director

John D. Reid, Ph.D.
Professor

Robert W. Bielenberg, M.S.M.E., E.I.T.
Research Engineer

Erin L. Urbank, B.A.
Research Communication Specialist

MIDWEST ROADSIDE SAFETY FACILITY
Nebraska Transportation Center
University of Nebraska-Lincoln

Main Office
Prem S. Paul Research Center at Whittier School
Room 130, 2200 Vine Street
Lincoln, Nebraska 68583-0853
(402) 472-0965

Outdoor Test Site
4630 N.W. 36th Street
Lincoln, Nebraska 68524

Submitted to

NEW JERSEY DEPARTMENT OF TRANSPORTATION
1035 Parkway Avenue,
Trenton, New Jersey 08625

MwRSF Research Report No. TRP-03-340-18

December 11, 2018

TECHNICAL REPORT DOCUMENTATION PAGE

1. Report No. TRP-03-340-18	2.	3. Recipient's Accession No.
4. Title and Subtitle Performance Evaluation of New Jersey's Portable Concrete Barrier with a Bolted Configuration and Grouted Toes – Test No. NJPCB-2		5. Report Date December 11, 2018 6.
7. Author(s) Bhakta, S.K., Lechtenberg, K.A., Faller, R.K., Reid, J.D., Bielenberg, R.W., and Urbank, E.L.		8. Performing Organization Report No. TRP-03-340-18
9. Performing Organization Name and Address Midwest Roadside Safety Facility (MwRSF) Nebraska Transportation Center University of Nebraska-Lincoln Main Office: Prem S. Paul Research Center at Whittier School Room 130, 2200 Vine Street Lincoln, Nebraska 68583-0853 Outdoor Test Site: 4630 N.W. 36th Street Lincoln, Nebraska 68524		10. Project/Task/Work Unit No. 11. Contract © or Grant (G) No. TPF-5(193) Supplement #88
12. Sponsoring Organization Name and Address New Jersey Department of Transportation 1035 Parkway Avenue Trenton, New Jersey 08625		13. Type of Report and Period Covered Final Report: 2015-2018 14. Sponsoring Agency Code
15. Supplementary Notes Prepared in cooperation with U.S. Department of Transportation, Federal Highway Administration.		

16. Abstract

This report documents a full-scale crash test conducted in support of a study to investigate the performance of New Jersey Department of Transportation's (NJDOT's) Precast Concrete Curb and Construction Barrier Curb, which will be referred to as portable concrete barrier (PCB) in various configurations. This represents the second system as part of this study.

The objective of this research effort was to evaluate the safety performance of the NJDOT PCB, Type 4 (Alternative B) with a bolted configuration and grouted toes, corresponding to joint class D in the 2013 NJDOT *Roadway Design Manual*. All barrier segments were bolted to a concrete tarmac through the anchor pockets with 1-in. (25-mm) diameter ASTM F1554 Grade 36 threaded rods epoxied into 1⅛-in. (29-mm) diameter drilled holes in the concrete tarmac. Non-shrink grout wedges were placed at the toe of each barrier segment in every joint between adjacent barrier segments. The barrier was evaluated according to the Test Level 3 (TL-3) criteria set forth in the *Manual for Assessing Safety Hardware* (MASH 2009). The research study included one full-scale vehicle crash test with a 2270P pickup truck. Following the successful redirection of the pickup truck, the safety performance of the system was determined to be acceptable according to the test designation no. 3-11 evaluation criteria specified in MASH 2009. The 1100C small car crash test was deemed unnecessary due to previous testing. The barrier successfully met MASH 2009 TL-3 criteria. This report is the second of nine documents in the nine-test series.

17. Document Analysis/Descriptors Highway Safety, Crash Test, Roadside Appurtenances, Compliance Test, MASH 2009, Longitudinal Barrier, Portable Concrete Barrier, PCB, Anchored, Bolted, Epoxy, and Barrier Curb		18. Availability Statement No restrictions. Document available from: National Technical Information Services, Springfield, Virginia 22161	
19. Security Class (this report) Unclassified	20. Security Class (this page) Unclassified	21. No. of Pages 126	22. Price

DISCLAIMER STATEMENT

This report was completed with funding from the New Jersey Department of Transportation. The contents of this report reflect the views and opinions of the authors who are responsible for the facts and the accuracy of the data presented herein. The contents do not necessarily reflect the official views or policies of the New Jersey Department of Transportation nor the Federal Highway Administration, U.S. Department of Transportation. This report does not constitute a standard, specification, regulation, product endorsement, or an endorsement of manufacturers.

UNCERTAINTY OF MEASUREMENT STATEMENT

The Midwest Roadside Safety Facility (MwRSF) has determined the uncertainty of measurements for several parameters involved in standard full-scale crash testing and non-standard testing of roadside safety features. Information regarding the uncertainty of measurements for critical parameters is available upon request by the sponsor and the Federal Highway Administration.

INDEPENDENT APPROVING AUTHORITY

The Independent Approving Authority (IAA) for the data contained herein was Mr. James Holloway, Research Engineer and Assistant Director – Physical Testing Division.

ACKNOWLEDGEMENTS

The authors wish to acknowledge several sources that made a contribution to this project: (1) New Jersey Department of Transportation for sponsoring this project and (2) MwRSF personnel for constructing the barrier and conducting the crash test.

Acknowledgement is also given to the following individuals who made a contribution to the completion of this research project.

Midwest Roadside Safety Facility

J.C. Holloway, M.S.C.E., E.I.T., Assistant Director – Physical Testing Division
J.D. Schmidt, Ph.D., P.E., Research Assistant Professor
C.S. Stolle, Ph.D., Research Assistant Professor
S.K. Rosenbaugh, M.S.C.E., E.I.T., Research Engineer
M. Asadollahi Pajouh, Ph.D., former Post-Doctoral Research Associate
S.A. Ranjha, Ph.D., former Post-Doctoral Research Associate
A.T. Russell, B.S.B.A., Testing and Maintenance Technician II
E.W. Krier, B.S., Construction and Testing Technician II
S.M. Tighe, Construction and Testing Technician I
D.S. Charroin, Construction and Testing Technician I
M.A. Rasmussen, Construction and Testing Technician I
M.T. Ramel, B.S.C.M., former Construction and Testing Technician I
R.M. Novak, Construction and Testing Technician I
J.E. Kohtz, B.S.M.E., CAD Technician
Undergraduate and Graduate Research Assistants

New Jersey Department of Transportation

Dave Bizuga, former Senior Executive Manager, Roadway Design Group 1
Giri Venkiteela, Research Project Manager, NJDOT Bureau of Research
Hung Tang, Design Standards Bureau, Roadway Standards Unit
Lee Steiner, Project Engineer, Bureau of Traffic Engineering

TABLE OF CONTENTS

TECHNICAL REPORT DOCUMENTATION PAGE i

DISCLAIMER STATEMENT ii

UNCERTAINTY OF MEASUREMENT STATEMENT ii

INDEPENDENT APPROVING AUTHORITY ii

ACKNOWLEDGEMENTS iii

TABLE OF CONTENTS iv

LIST OF FIGURES vi

LIST OF TABLES ix

1 INTRODUCTION 1
- 1.1 Background 1
- 1.2 Objective 2
- 1.3 Scope 2

2 TEST REQUIREMENTS AND EVALUATION CRITERIA 3
- 2.1 Test Requirements 3
- 2.2 Evaluation Criteria 4

3 DESIGN DETAILS 6

4 TEST CONDITIONS 25
- 4.1 Test Facility 25
- 4.2 Vehicle Tow and Guidance System 25
- 4.3 Test Vehicle 25
- 4.4 Simulated Occupant 29
- 4.5 Data Acquisition Systems 29
  - 4.5.1 Accelerometers 29
  - 4.5.2 Rate Transducers 29
  - 4.5.3 Retroreflective Optic Speed Trap 29
  - 4.5.4 Digital Photography 30

5 FULL-SCALE CRASH TEST NO. NJPCB-2 32
- 5.1 Weather Conditions 32
- 5.2 Test Description 32
- 5.3 Barrier Damage 34
- 5.4 Vehicle Damage 35
- 5.5 Occupant Risk 37
- 5.6 Discussion 37

6 SUMMARY AND CONCLUSIONS 55

7 MASH IMPLEMENTATION 57

8 REFERENCES 59

9 APPENDICES 61
Appendix A. NJDOT PCB Standard Plans 62
Appendix B. Material Specifications 68
Appendix C. Concrete Tarmac Strength 95
Appendix D. Tensile Failure Criteria 98
Appendix E. Vehicle Center of Gravity Determination 102
Appendix F. Vehicle Deformation Records 104
Appendix G. Accelerometer and Rate Transducer Data Plots, Test No. NJPCB-2 109

LIST OF FIGURES

Figure 1. Test Installation Layout, Test No. NJPCB-2 7
Figure 2. PCB Bolt Anchor Details, Test No. NJPCB-2 8
Figure 3. PCB Bolt Anchor Locations, Test No. NJPCB-2 9
Figure 4. PCB Details, Test No. NJPCB-2 10
Figure 5. PCB Reinforcement Details, Test No. NJPCB-2 11
Figure 6. PCB Reinforcement Details – End View, Test No. NJPCB-2 12
Figure 7. Connection Key Assembly Details, Test No. NJPCB-2 13
Figure 8. Connection Key Component Details, Test No. NJPCB-2 14
Figure 9. PCB Connection Socket Details, Test No. NJPCB-2 15
Figure 10. PCB Connection Socket Component Details, Test No. NJPCB-2 16
Figure 11. Connection Key Placement Details, Test No. NJPCB-2 17
Figure 12. PCB Reinforcement Details, Test No. NJPCB-2 18
Figure 13. Bolt Anchor Details, Test No. NJPCB-2 19
Figure 14. General Notes, Test No. NJPCB-2 20
Figure 15. Bill of Materials, Test No. NJPCB-2 21
Figure 16. NJDOT PCB with Bolted Configuration and Grouted Toes Test Installation, Test No. NJPCB-2 22
Figure 17. PCB Connection Key and Grout between Barriers, Test No. NJPCB-2 23
Figure 18. Bolt Anchors, Test No. NJPCB-2 24
Figure 19. Test Vehicle, Test No. NJPCB-2 26
Figure 20. Vehicle Dimensions, Test No. NJPCB-2 27
Figure 21. Target Geometry, Test No. NJPCB-2 28
Figure 22. Camera Locations, Speeds, and Lens Settings, Test No. NJPCB-2 31
Figure 23. Permanent Set Deflection, Dynamic Deflection and Working Width, Test No. NJPCB-2 35
Figure 24. Summary of Test Results and Sequential Photographs, Test No. NJPCB-2 38
Figure 25. Additional Sequential Photographs, Test No. NJPCB-2 39
Figure 26. Additional Sequential Photographs, Test No. NJPCB-2 40
Figure 27. Documentary Photographs, Test No. NJPCB-2 41
Figure 28. Impact Location, Test No. NJPCB-2 42
Figure 29. Vehicle Final Position and Trajectory Marks, Test No. NJPCB-2 43
Figure 30. System Damage – Front, Back, Upstream and Downstream End, Test No. NJPCB-2 44
Figure 31. Barrier Nos. 4 and 5 Damage, Test No. NJPCB-2 45
Figure 32. Barrier No. 4 Damage, Test No. NJPCB-2 46
Figure 33. Barrier No. 5 Damage, Test No. NJPCB-2 47
Figure 34. Barrier No. 5 Damage, Test No. NJPCB-2 48
Figure 35. Vehicle Damage, Test No. NJPCB-2 49
Figure 36. Vehicle Damage, Test No. NJPCB-2 50
Figure 37. Vehicle Damage, Test No. NJPCB-2 51
Figure 38. Windshield Damage, Test No. NJPCB-2 52
Figure 39. Occupant Compartment Deformation, Test No. NJPCB-2 53
Figure 40. Undercarriage Damage, Test No. NJPCB-2 54
Figure A-1. NJDOT PCB Standard Plans 63
Figure A-2. NJDOT PCB Standard Plans 64

Figure A-3. NJDOT PCB Standard Plans 65
Figure A-4. NJDOT PCB Standard Plans 66
Figure A-5. NJDOT PCB Standard Plans 67
Figure B-2. Concrete Barrier Segment – Concrete Strength, Test No. NJPCB-2 70
Figure B-3. Rebar No. 4 Material Certificate, Test No. NJPCB-2 71
Figure B-4. Rebar No. 4 Material Certificate, Test No. NJPCB-2 72
Figure B-5. Rebar No. 4 Material Certificate, Test No. NJPCB-2 73
Figure B-6. Rebar No. 4 Material Certificate, Test No. NJPCB-2 74
Figure B-7. Rebar No. 4 Material Certificate, Test No. NJPCB-2 75
Figure B-8. Rebar No. 4 Material Certificate, Test No. NJPCB-2 76
Figure B-9. Rebar No. 6 Material Certificate, Test No. NJPCB-2 77
Figure B-10. Rebar No. 6 Material Certificate, Test No. NJPCB-2 78
Figure B-11. Steel Tube Material Certificate, Test No. NJPCB-2 79
Figure B-12. Steel Tube Material Certificate, Test No. NJPCB-2 80
Figure B-13. Steel Tube Material Certificate, Test No. NJPCB-2 81
Figure B-14. Steel Tube Material Test Certificate, Test No. NJPCB-2 82
Figure B-15. Steel Tube Material Certificate, Test No. NJPCB-2 83
Figure B-16. Steel Tube Material Certificate, Test No. NJPCB-2 84
Figure B-17. 2-in. × ¼-in. (51-mm × 6-mm) Bent Steel Plate, Test No. NJPCB-2 85
Figure B-18. ½-in. (13-mm) Thick Steel Plate Material Certificate 86
Figure B-19. ½-in. (13-mm) Thick Steel Plate Material Certificate, Test No. NJPCB-2 87
Figure B-20. Non-Shrink Grout Specifications, Test No. NJPCB-2 88
Figure B-21. Non-Shrink Grout Specifications, Test No. NJPCB-2 89
Figure B-22. Threaded Rods Material Certificate, Test No. NJPCB-2 90
Figure B-23. Anchor Nuts Material Certificate, Test No. NJPCB-2 91
Figure B-24. Barrier No. 1 Anchor Nut Material Certificate, Test No. NJPCB-2 92
Figure B-25. Anchor Square Washers Material Certificate, Test No. NJPCB-2 93
Figure B-26. Epoxy Bond Strength, Test No. NJPCB-2 [17] 94
Figure C-1. Concrete Tarmac Strength Test, Test No. NJPCB-2 96
Figure C-2. Concrete Tarmac Strength Test, Test No. NJPCB-2 97
Figure E-1. Vehicle Mass Distribution, Test No. NJPCB-2 103
Figure F-1. Floor Pan Deformation Data – Set 1, Test No. NJPCB-2 105
Figure F-2. Occupant Compartment Deformation Data – Set 1, Test No. NJPCB-2 106
Figure F-3. Exterior Vehicle Crush (NASS) - Front, Test No. NJPCB-2 107
Figure F-4. Exterior Vehicle Crush (NASS) - Side, Test No. NJPCB-2 108
Figure G-1. 10-ms Average Longitudinal Deceleration (SLICE-1), Test No. NJPCB-2 110
Figure G-2. Longitudinal Occupant Impact Velocity (SLICE-1), Test No. NJPCB-2 111
Figure G-3. Longitudinal Occupant Displacement (SLICE-1), Test No. NJPCB-2 112
Figure G-4. 10-ms Average Lateral Deceleration (SLICE-1), Test No. NJPCB-2 113
Figure G-5. Lateral Occupant Impact Velocity (SLICE-1), Test No. NJPCB-2 114
Figure G-6. Lateral Occupant Displacement (SLICE-1), Test No. NJPCB-2 115
Figure G-7. Vehicle Angular Displacements (SLICE-1), Test No. NJPCB-2 116
Figure G-8. Acceleration Severity Index (SLICE-1), Test No. NJPCB-2 117
Figure G-9. 10-ms Average Longitudinal Deceleration (SLICE-2), Test No. NJPCB-2 118
Figure G-10. Longitudinal Occupant Impact Velocity (SLICE-2), Test No. NJPCB-2 119
Figure G-11. Longitudinal Occupant Displacement (SLICE-2), Test No. NJPCB-2 120
Figure G-12. 10-ms Average Lateral Deceleration (SLICE-2), Test No. NJPCB-2 121

Figure G-13. Lateral Occupant Impact Velocity (SLICE-2), Test No. NJPCB-2 122
Figure G-14. Lateral Occupant Displacement (SLICE-2), Test No. NJPCB-2 123
Figure G-15. Vehicle Angular Displacements (SLICE-2), Test No. NJPCB-2.....124
Figure G-16. Acceleration Severity Index (SLICE-2), Test No. NJPCB-2.....125

LIST OF TABLES

Table 1. 2013 NJDOT Roadway Design Manual PCB Guidance [1].....1
Table 2. Current 2015 NJDOT Roadway Design Manual PCB Guidance [2] 1
Table 3. MASH 2009 TL-3 Crash Test Conditions for Longitudinal Barriers.....3
Table 4. MASH 2009 Evaluation Criteria for Longitudinal Barrier.....5
Table 5. Weather Conditions, Test No. NJPCB-2 32
Table 6. Sequential Description of Impact Events, Test No. NJPCB-2 32
Table 7. Maximum Occupant Compartment Deformations by Location 36
Table 8. Summary of OIV, ORA, THIV, PHD, and ASI Values, Test No. NJPCB-2.....37
Table 9. Summary of Safety Performance Evaluation.....56
Table B-1. Bill of Materials, Test No. NJPCB-2.....69

1 INTRODUCTION

1.1 Background

The New Jersey Department of Transportation (NJDOT) currently uses a New Jersey shape, Precast Concrete Curb, Concrete Barrier, which will be referred to as portable concrete barrier (PCB), with a vertical, I-beam connection pin to attach barriers end to end within their work zones and construction areas. The 2013 NJDOT *Roadway Design Manual* [1] provided guidance on allowable barrier deflections for various classes of PCB joint treatments, as shown in Table 1. The current 2015 NJDOT *Roadway Design Manual* [2] provides guidance on allowable deflections for various connection types, as shown in Table 2.

Table 1. 2013 NJDOT Roadway Design Manual PCB Guidance [1]

Joint Class	Use	Joint Treatment
A	Allowable movement over 16 to 24 inches	Connection Key only
B	Allowable movement over 11 to 16 inches	Connection Key and grout in every joint
C	Allowable movement of 11 inches	Connection Key and grout in every joint and pin every other unit. In units to be anchored, pin should be required in every recess
D	No allowable movement (i.e., bridge parapet)	Connection Key and grout in every joint and bolt every anchor pocket hole in every unit.

Table 2. Current 2015 NJDOT Roadway Design Manual PCB Guidance [2]

Connection Type	Use	Joint Treatment*
A	Maximum allowable deflection of 41 inches	Connection Key and barrier end sections fully pinned
B	Maximum allowable deflection of 28 inches (Cannot be used with traffic on both sides of the barrier.)	Connection Key, 6” by 6” box beam, and barrier end sections fully pinned
C	Maximum allowable deflection of 11 inches	Connection Key, construction side of all sections pinned, and barrier end sections fully pinned

* Barrier end sections fully pinned – first and last barrier segments of the entire run regardless of connection type have pins in every anchor recess on both sides.

The guidance provided in both the 2013 and 2015 *Roadway Design Manual* was based on test data obtained from previous testing standards, which needs to be updated to be consistent with current crash testing standards and a changing vehicle fleet. Crash testing of other PCB systems under the Test Level 3 (TL-3) criteria of the *Manual for Assessing Safety Hardware* (MASH 2009) [3] has indicated that dynamic barrier deflections can increase significantly when compared to dynamic deflections based on older crash test data. Thus, a need exists to investigate the

performance of the NJDOT PCB system in various configurations in order to provide updated design guidance. The NJDOT PCB standard plans are shown in Appendix A.

1.2 Objective

The objective of this research effort was to evaluate the safety performance of NJDOT's PCB, Type 4 (Alternative B), system with a bolted configuration and grouted toes, corresponding to joint class D in the 2013 NJDOT *Roadway Design Manual* [1]. The system was to be evaluated according to the Test Level 3 (TL-3) criteria set forth in the *Manual for Assessing Safety Hardware* (MASH 2009) [3].

1.3 Scope

The research objective was achieved through completion of several tasks. One full-scale crash test was conducted on the PCB system according to MASH 2009 test designation no. 3-11. Next, the full-scale vehicle crash test results were analyzed, evaluated, and documented. Conclusions and recommendations were then made pertaining to the safety performance of the PCB system.

2 TEST REQUIREMENTS AND EVALUATION CRITERIA

2.1 Test Requirements

Longitudinal barriers, such as PCBs, must satisfy impact safety standards in order to be declared eligible for federal reimbursement by the Federal Highway Administration (FHWA) for use on the National Highway System (NHS). For new hardware, these safety standards consist of the guidelines and procedures published in MASH 2016 [4]. Note that there is no difference between MASH 2009 and MASH 2016 for most longitudinal barriers, such as the PCB system tested in this project, except that additional occupant compartment deformation measurements are required by MASH 2016. According to TL-3 of MASH 2009, longitudinal barrier systems must be subjected to two full-scale vehicle crash tests, as summarized in Table 3. However, only the 2270P crash test was deemed necessary as other prior small car tests were used to support a decision to deem the 1100C crash test not critical.

Table 3. MASH 2009 TL-3 Crash Test Conditions for Longitudinal Barriers

Test Article	Test Designation No.	Test Vehicle	Vehicle Weight, lb (kg)	Impact Conditions		Evaluation Criteria [1]
				Speed, mph (km/h)	Angle, deg.	
Longitudinal Barrier	3-10	1100C	2,420 (1,100)	62 (100)	25	A,D,F,H,I
	3-11	2270P	5,000 (2,268)	62 (100)	25	A,D,F,H,I

[1] Evaluation criteria explained in Table 4.

In test no. 7069-3, a rigid, F-shape, concrete bridge rail was successfully impacted by a small car weighing 1,800 lb (816 kg) at 60.1 mph (96.7 km/h) and 21.4 degrees according to the American Association of State Highway and Transportation Officials (AASHTO) *Guide Specifications for Bridge Railings* [5-6]. In the same manner, test nos. CMB-5 through CMB-10, CMB-13, and 4798-1 showed that rigid, New Jersey, concrete safety shape barriers struck by small cars have been shown to meet safety performance standards [7-8]. In additional, in test no. 2214NJ-1, a rigid, New Jersey, ½-section, concrete safety shape barrier was impacted by a passenger car weighing 2,579 lb (1,170 kg) at 60.8 mph (97.8 km/h) and 26.1 degrees according to the TL-3 standards set forth in MASH 2009 [9]. Furthermore, temporary, New Jersey safety shape, concrete median barriers have experienced only slight barrier deflections when impacted by small cars and behave similarly to rigid concrete barriers as seen in test no. 47 [10]. As such, the 1100C passenger car test was deemed not critical for testing and evaluating this PCB system.

It should be noted that the test matrix detailed herein represents the researchers' best engineering judgement with respect to the MASH 2009 safety requirements and their internal evaluation of critical tests necessary to evaluate the crashworthiness of the barrier system. However, the recent switch to new vehicle types as part of the implementation of the MASH 2009 criteria and the lack of experience and knowledge regarding the performance of the new vehicle types with certain types of hardware could result in unanticipated barrier performance. Thus, any

tests within the evaluation matrix deemed non-critical may eventually need to be evaluated based on additional knowledge gained over time or revisions to the MASH 2009 criteria.

2.2 Evaluation Criteria

Evaluation criteria for full-scale vehicle crash testing are based on three appraisal areas: (1) structural adequacy; (2) occupant risk; and (3) vehicle trajectory after collision. Criteria for structural adequacy are intended to evaluate the ability of the PCB system to contain and redirect impacting vehicles. In addition, controlled lateral deflection of the test article is acceptable. Occupant risk evaluates the degree of hazard to occupants in the impacting vehicle. Post-impact vehicle trajectory is a measure of the potential of the vehicle to result in a secondary collision with other vehicles and/or fixed objects, thereby increasing the risk of injury to the occupants of the impacting vehicle and/or other vehicles. These evaluation criteria are summarized in Table 4 and defined in greater detail in MASH 2009. The full-scale vehicle crash test documented herein was conducted and reported in accordance with the procedures provided in MASH 2009.

In addition to the standard occupant risk measures, the Post-Impact Head Deceleration (PHD), the Theoretical Head Impact Velocity (THIV), and the Acceleration Severity Index (ASI) were determined and reported on the test summary sheet. Additional discussion on PHD, THIV and ASI is provided in MASH 2009.

Table 4. MASH 2009 Evaluation Criteria for Longitudinal Barrier

<table>
<tr><td>Structural Adequacy</td><td>A.</td><td colspan="3">Test article should contain and redirect the vehicle or bring the vehicle to a controlled stop; the vehicle should not penetrate, underride, or override the installation although controlled lateral deflection of the test article is acceptable.</td></tr>
<tr><td rowspan="6">Occupant Risk</td><td>D.</td><td colspan="3">Detached elements, fragments or other debris from the test article should not penetrate or show potential for penetrating the occupant compartment, or present an undue hazard to other traffic, pedestrians, or personnel in a work zone. Deformations of, or intrusions into, the occupant compartment should not exceed limits set forth in Section 5.3 and Appendix E of MASH 2009.</td></tr>
<tr><td>F.</td><td colspan="3">The vehicle should remain upright during and after collision. The maximum roll and pitch angles are not to exceed 75 degrees.</td></tr>
<tr><td rowspan="4">H.</td><td colspan="3">Occupant Impact Velocity (OIV) (see Appendix A, Section A5.3 of MASH 2009 for calculation procedure) should satisfy the following limits:</td></tr>
<tr><td colspan="3">Occupant Impact Velocity Limits</td></tr>
<tr><td>Component</td><td>Preferred</td><td>Maximum</td></tr>
<tr><td>Longitudinal and Lateral</td><td>30 ft/s
(9.1 m/s)</td><td>40 ft/s
(12.2 m/s)</td></tr>
<tr><td rowspan="4">I.</td><td colspan="3">The Occupant Ridedown Acceleration (ORA) (see Appendix A, Section A5.3 of MASH 2009 for calculation procedure) should satisfy the following limits:</td></tr>
<tr><td colspan="3">Occupant Ridedown Acceleration Limits</td></tr>
<tr><td>Component</td><td>Preferred</td><td>Maximum</td></tr>
<tr><td>Longitudinal and Lateral</td><td>15.0 g’s</td><td>20.49 g’s</td></tr>
</table>

3 DESIGN DETAILS

The test installation consisted of ten 20-ft (6.1-m) long NJDOT PCBs with a bolted configuration and grouted toes, as shown in Figures 1 through 15. This system uses NJDOT barriers, Type 4 (Alternative B) with joint class D, as specified in the 2013 NJDOT *Roadway Design Manual*. Photographs of the test installation are shown in Figures 16 through 18. Material specifications, mill certifications, and certificates of conformity for the system materials are shown in Appendix B.

The concrete mix for the barrier sections required a minimum 28-day compressive strength of 3,700 psi (25.5 MPa). A minimum concrete cover of 1½ in. (38 mm) was used along all rebar in the barrier. All of the steel reinforcement in the barrier was ASTM A615 Grade 60 rebar and consisted of four No. 6 longitudinal bars, eight No. 4 bars for the vertical stirrups, four No. 6 lateral bars, and nine No. 4 bars for the anchor hole reinforcement loops. The section reinforcement details are shown in Figures 5 and 6.

The barrier sections used a connection key, as shown in Figures 7 through 11, 16, and 17. The connection key assembly consisted of ½-in. (13-mm) thick ASTM A36 steel plates welded together to form the key shape. A connection socket was configured at each end of the PCB, as shown in Figures 2, 16, and 17. The connection socket consisted of three ASTM A36 steel plates welded on the sides of ASTM A500 Grade B or C steel tube, as shown in Figure 9. The connection key was inserted into the steel tubes of two adjoining PCBs to form the connection, as shown in Figure 10.

All barrier segments were anchored to the concrete tarmac through the anchor pockets with 1-in. (25-mm) diameter ASTM F1554 Grade 36 threaded rods epoxied into 1⅛-in. (29-mm) diameter holes in the concrete tarmac, as shown in Figures 2, 3, and 18. The anchor rods were embedded to a depth of 7 in. (178 mm), as shown in Figure 1. A plate washer and nut were attached to the threaded rods to secure the barriers in place. During installation, the barrier segments were pulled in a direction parallel to their longitudinal axes, and slack was removed from all joints. After slack was removed from all of the joints, 1¼-in. (32-mm) diameter holes were drilled for bolt anchors at their recess locations. Five samples of concrete tarmac were tested from five different locations of the MwRSF Outdoor Test Site. The concrete tarmac had a compressive strength ranging between 5,970 and 7,040 psi (41.2 and 48.5 MPa), as shown in Appendix C. Non-shrink grout wedges were placed at the toe of each barrier segment in every joint between adjacent barrier segments, as shown in Figure 17. The grout wedges consisted of a grout mix with a minimum 1-day compressive strength of 1,000 psi (6.9 MPa). The non-shrink grout mix used for this test was same as the mix used for test no. NJPCB-1, hence it had compressive strength over 1,000 psi (6.9 MPa) [11]. The bond strength of the epoxy used to anchor the bolt anchor rods to the concrete tarmac was 1,461 psi (10.1 MPa), as shown in Appendix B.

The pavement provided adequate strength, and full-scale crash testing could be conducted on the barrier system. This barrier system satisfied all tensile failure criteria set by NJDOT for their PCBs, as shown in Appendix D. When anchor rods are embedded 7 in. (178 mm) into MwRSF's concrete tarmac, the anchor bolts have a theoretical tensile pullout capacity of more than 20,500 lb (91.2 kN).

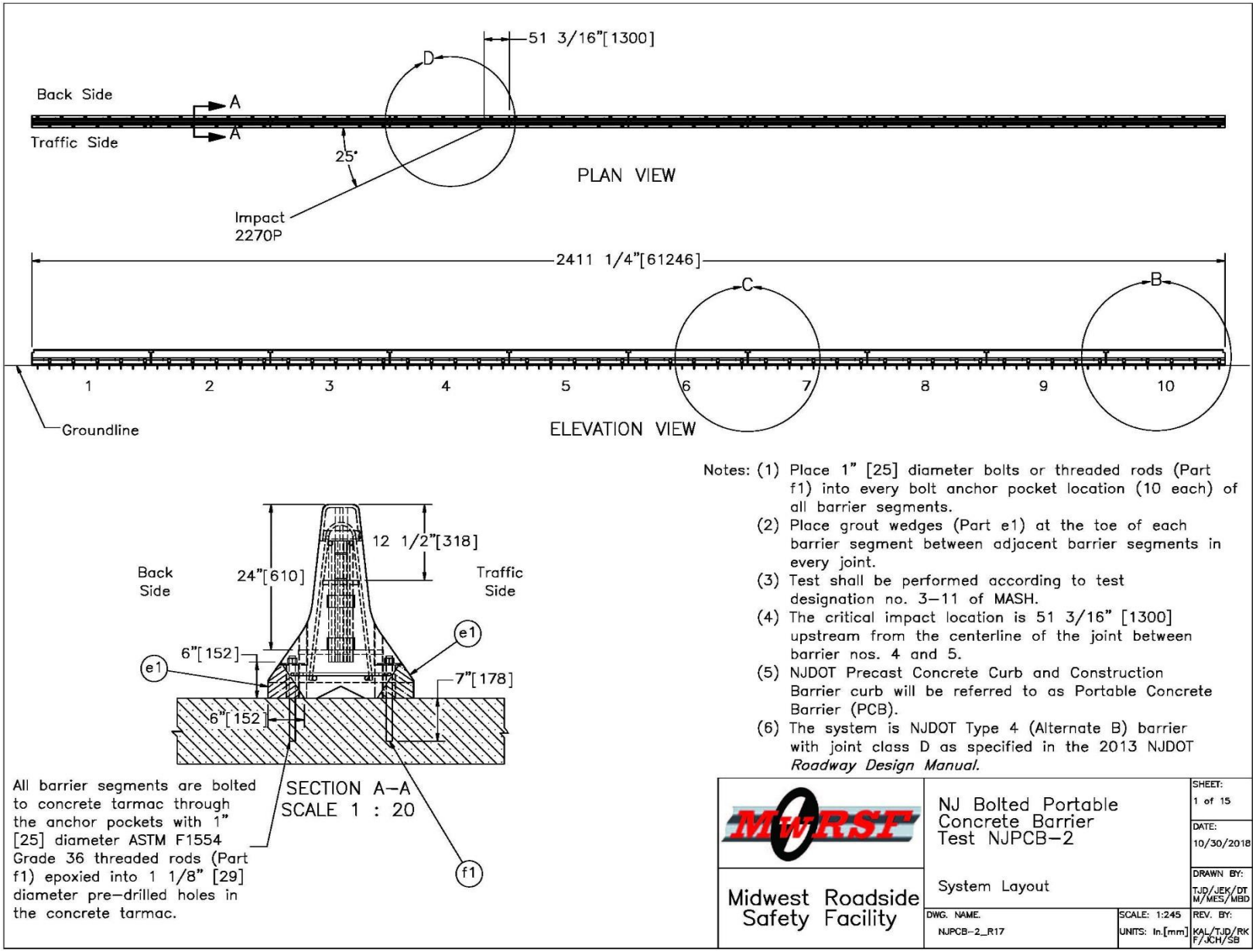

Figure 1. Test Installation Layout, Test No. NJPCB-2

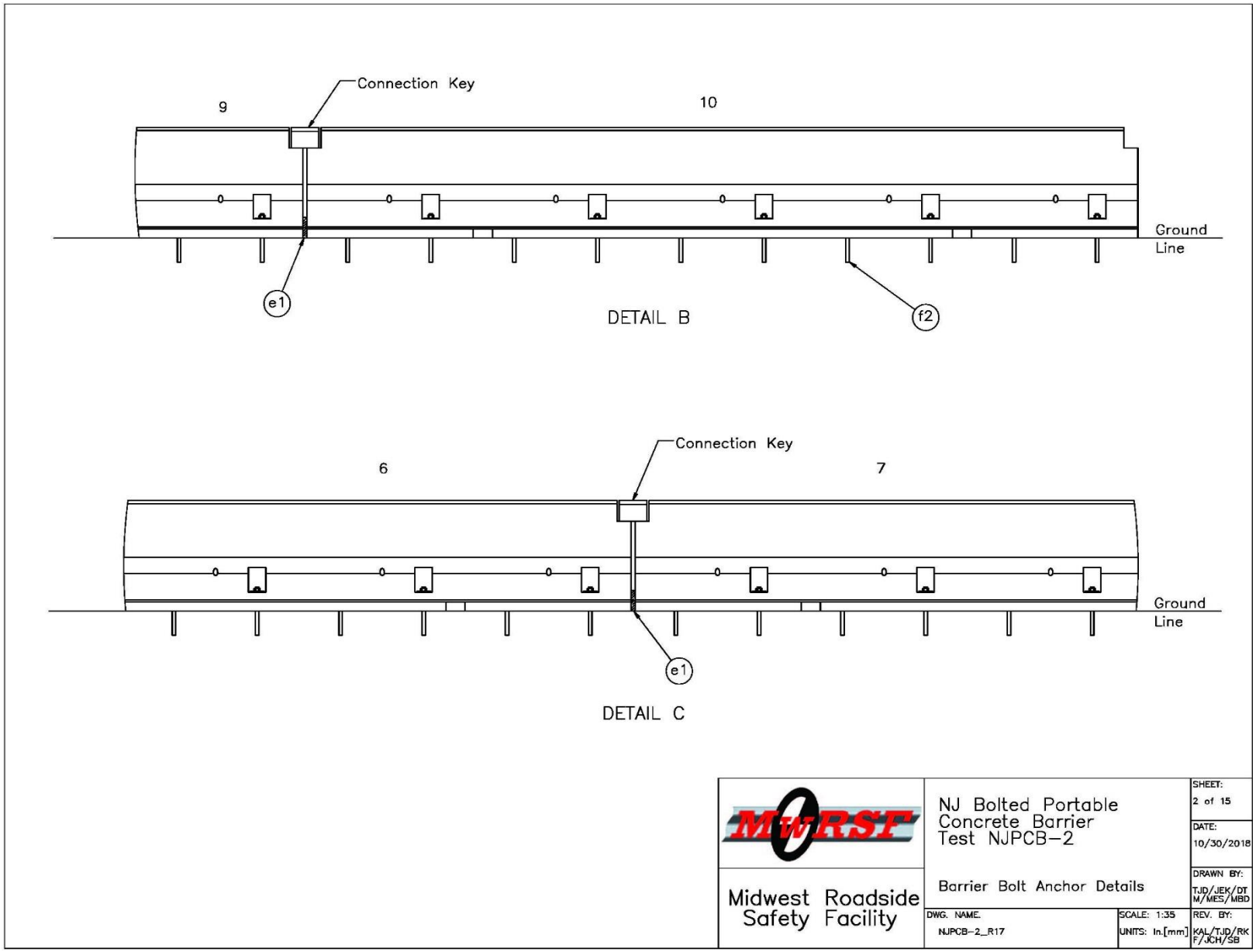

Figure 2. PCB Bolt Anchor Details, Test No. NJPCB-2

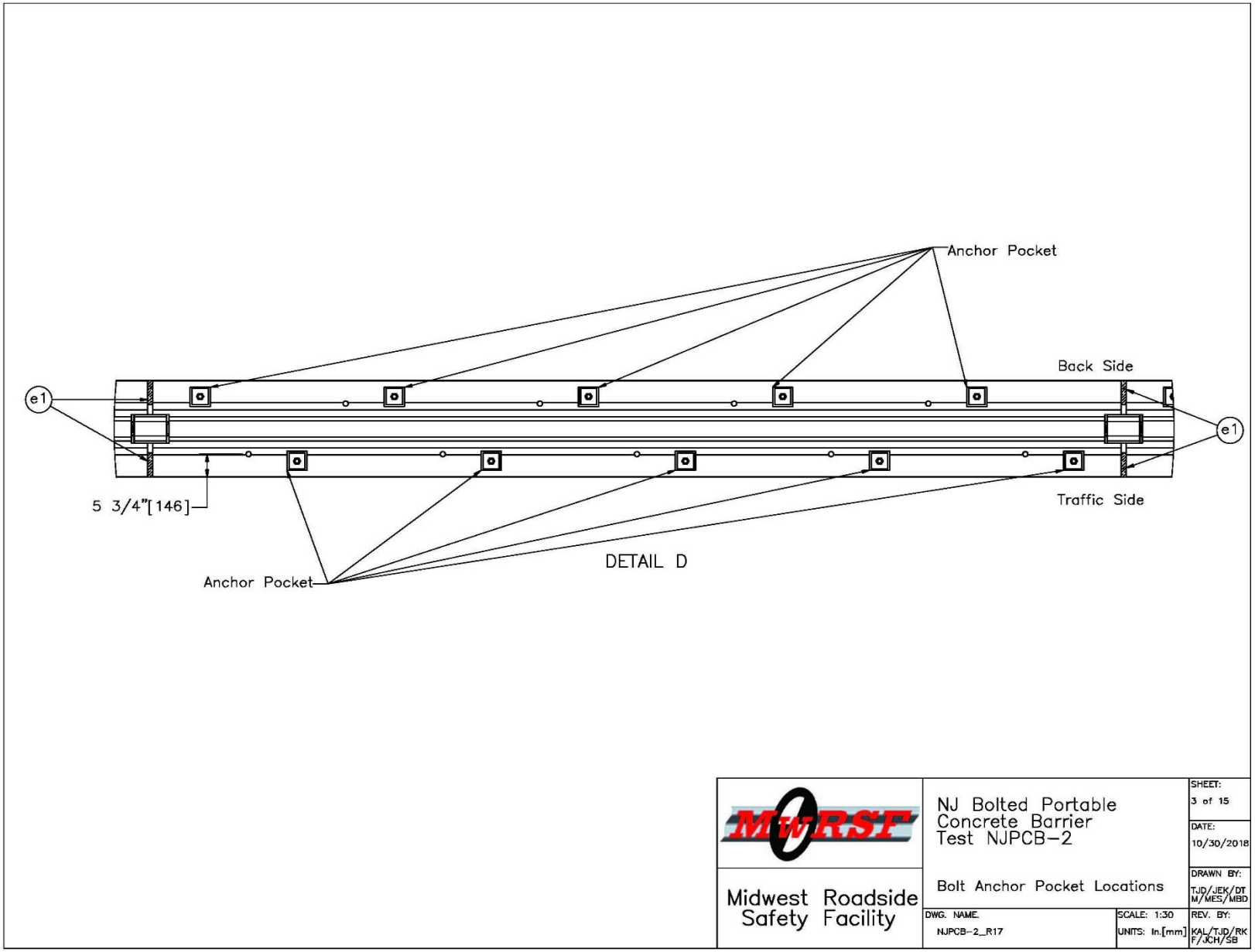

Figure 3. PCB Bolt Anchor Locations, Test No. NJPCB-2

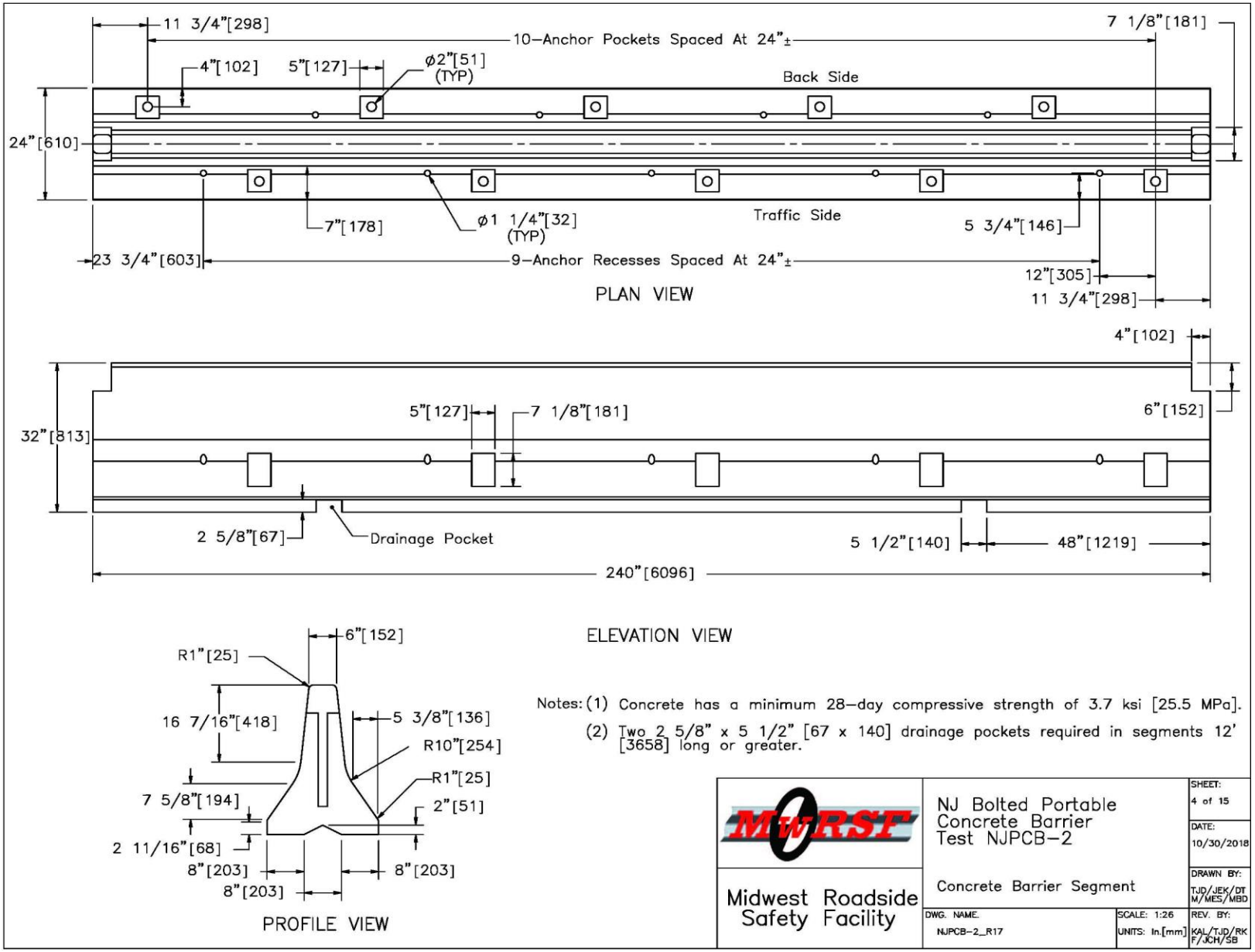

Figure 4. PCB Details, Test No. NJPCB-2

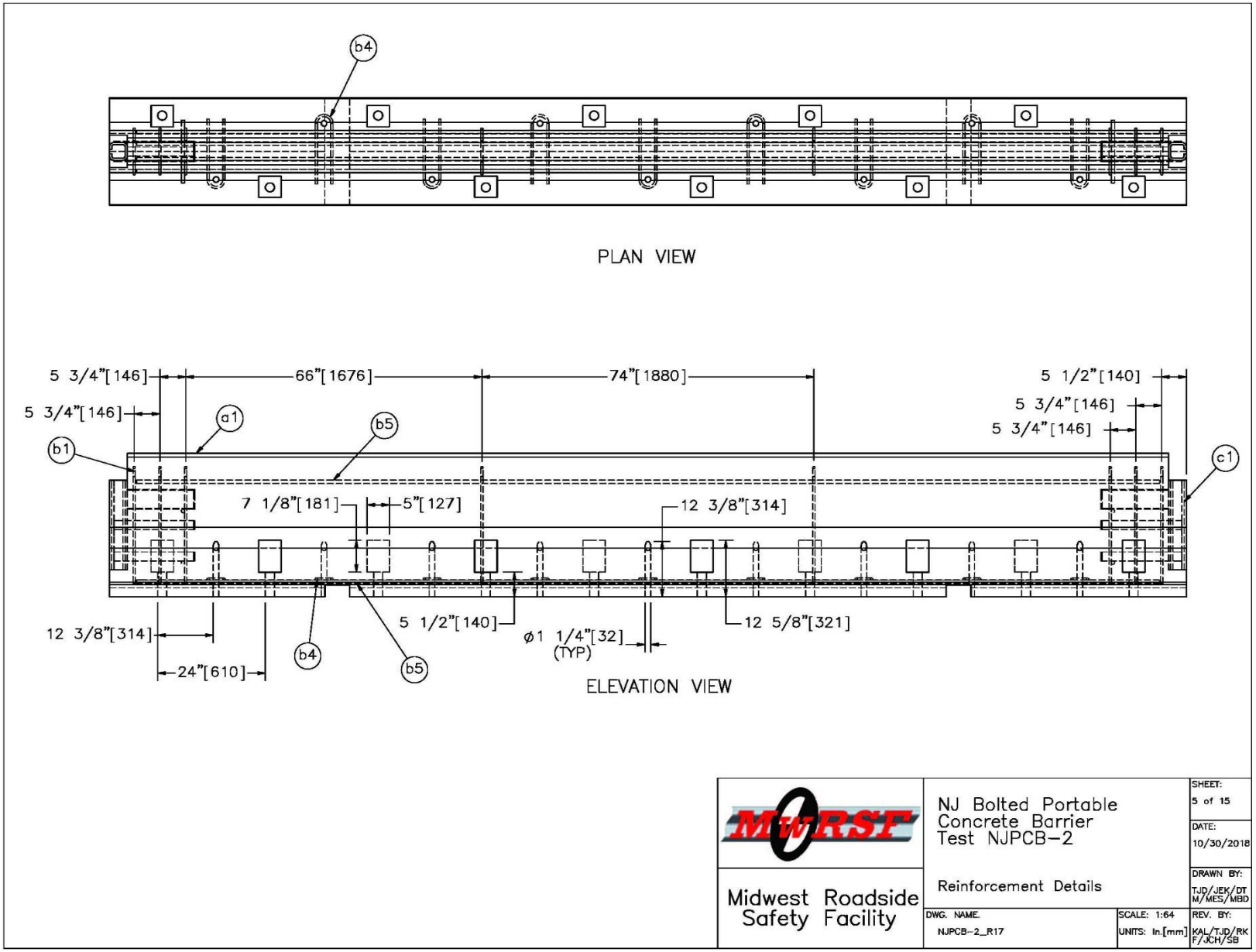

Figure 5. PCB Reinforcement Details, Test No. NJPCB-2

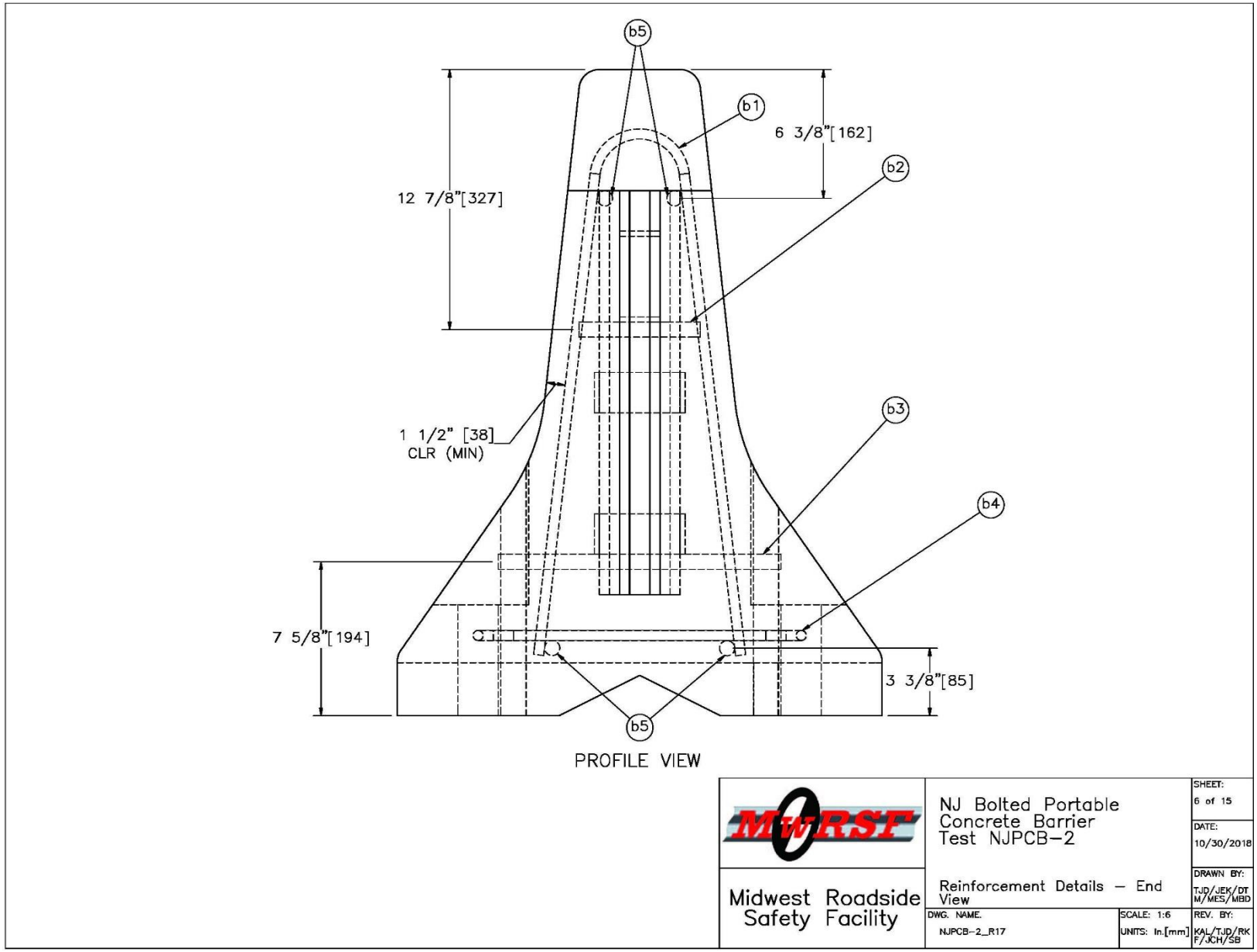

Figure 6. PCB Reinforcement Details – End View, Test No. NJPCB-2

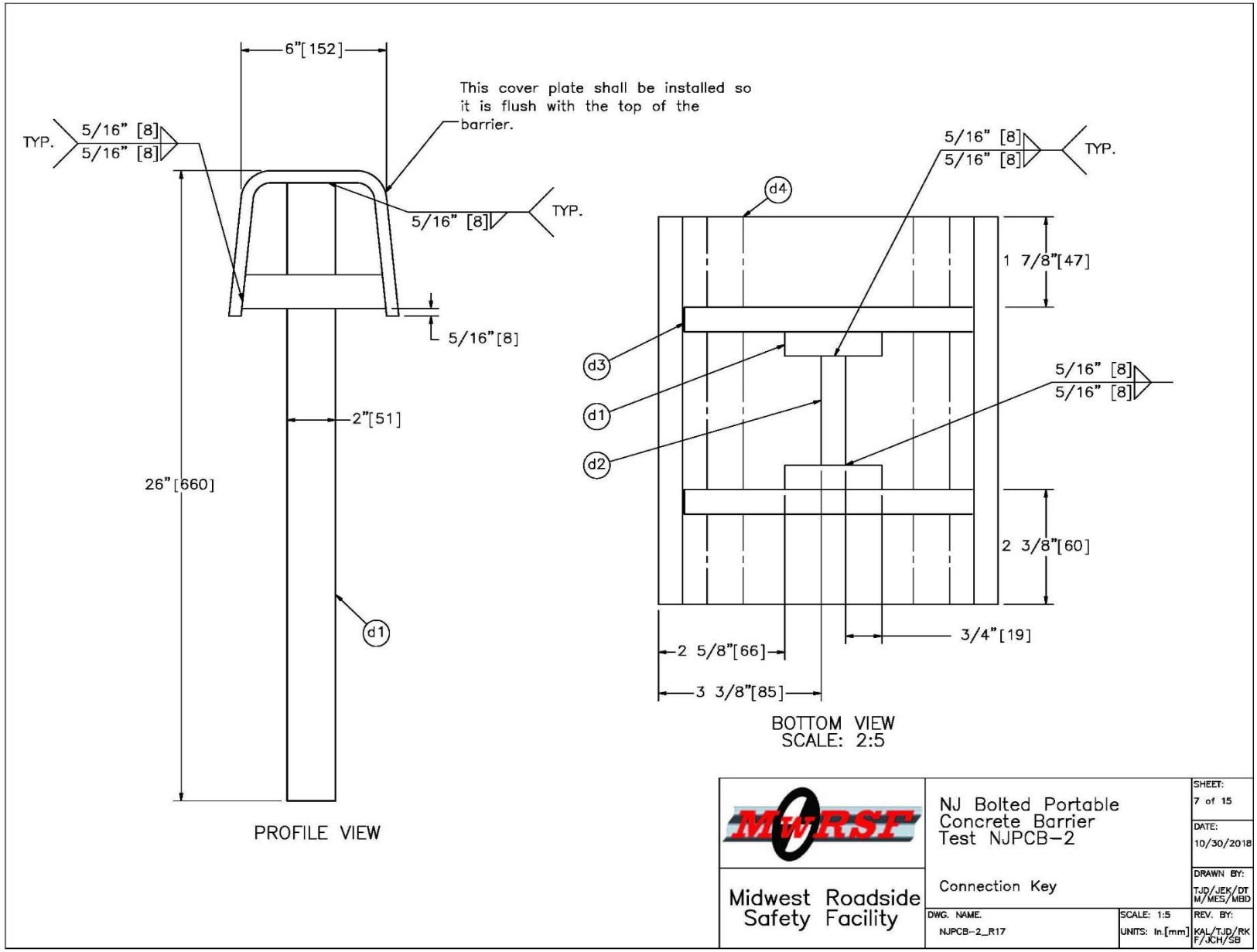

Figure 7. Connection Key Assembly Details, Test No. NJPCB-2

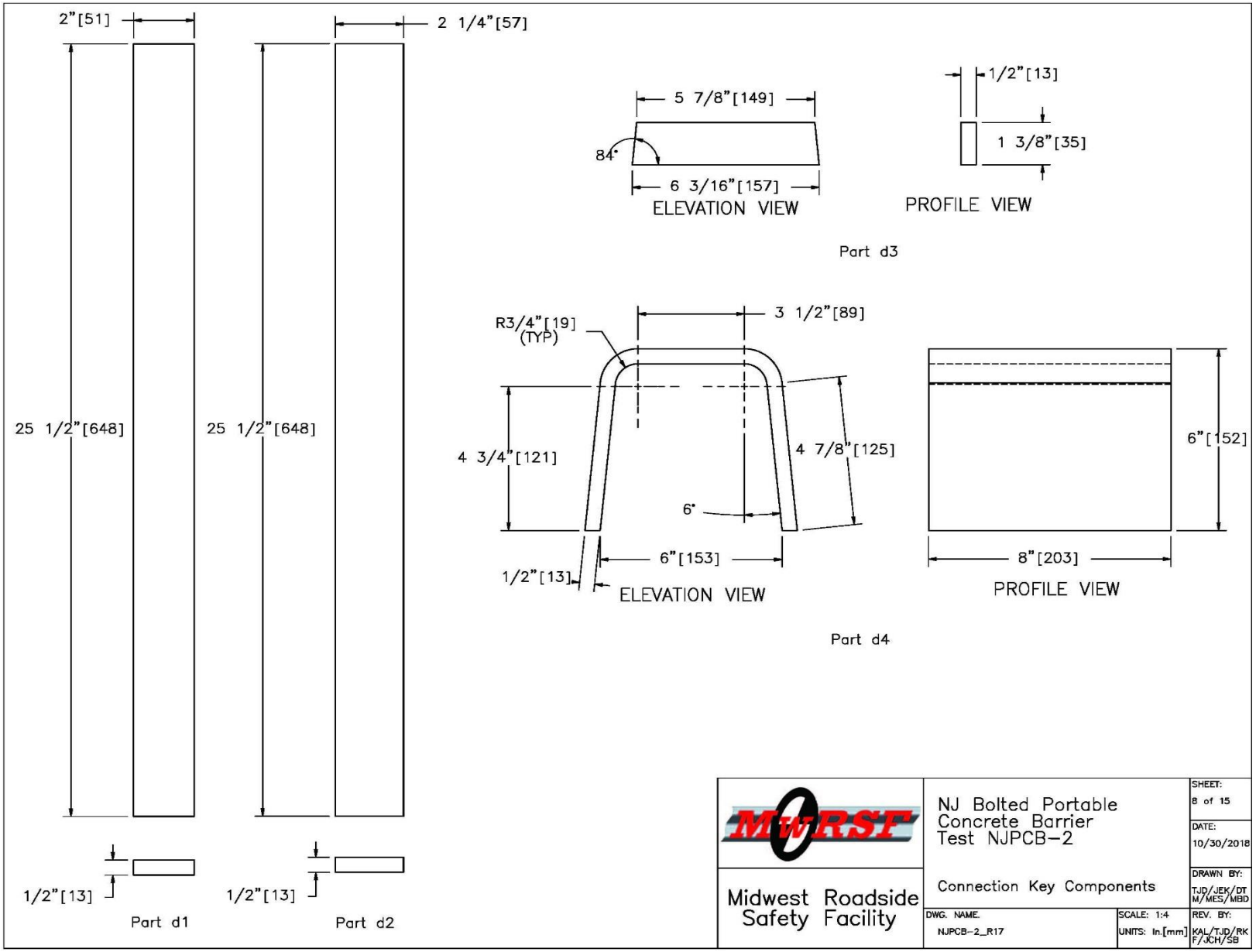

Figure 8. Connection Key Component Details, Test No. NJPCB-2

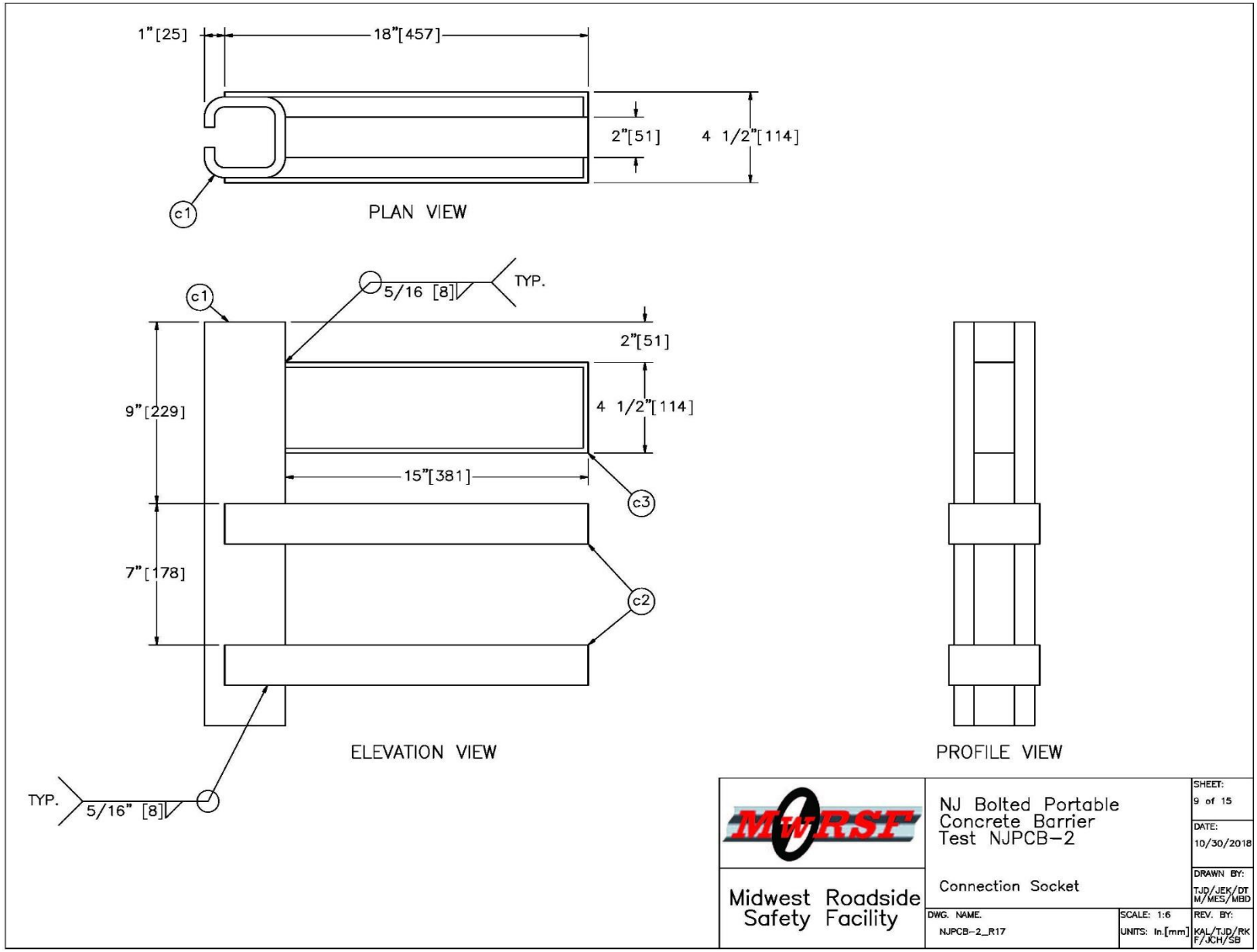

Figure 9. PCB Connection Socket Details, Test No. NJPCB-2

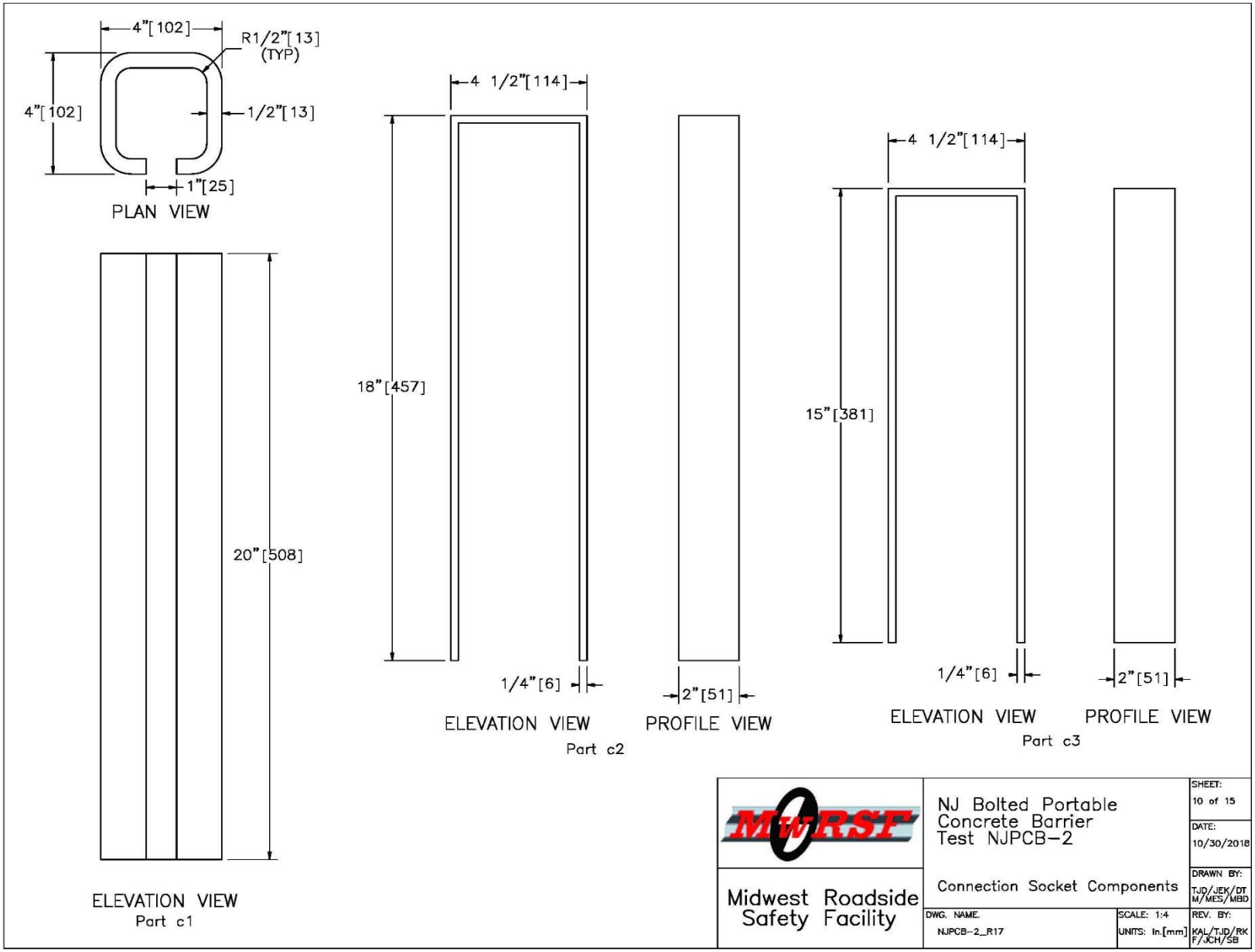

Figure 10. PCB Connection Socket Component Details, Test No. NJPCB-2

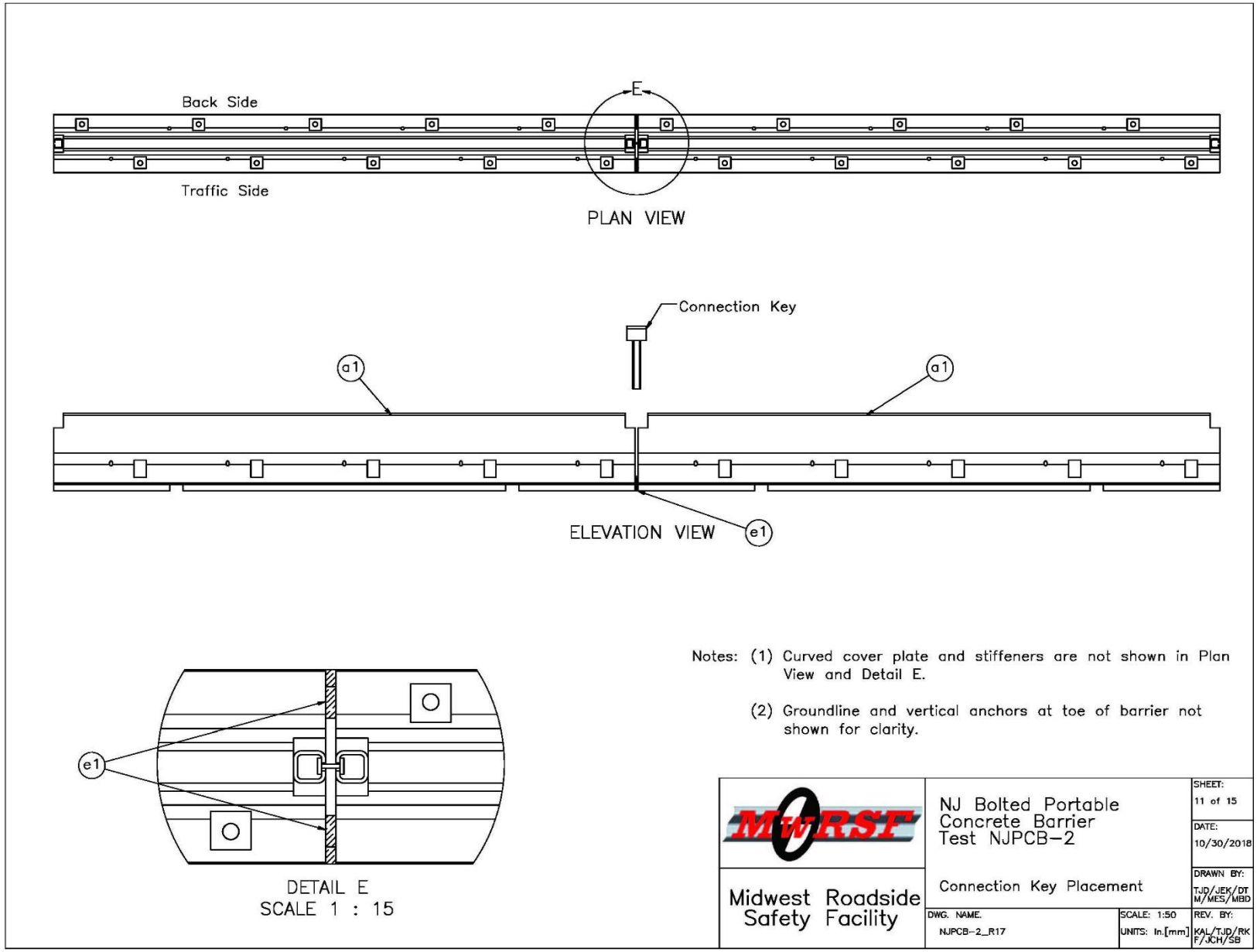

Figure 11. Connection Key Placement Details, Test No. NJPCB-2

BILL OF BARS				
ITEM NO.	QTY.	BAR SIZE	TOTAL LENGTH	MATERIAL SPEC.
b1	80	#4 [13]	59" [1499]	A615 Gr. 60
b2	20	#6 [19]	6" [152]	A615 Gr. 60
b3	20	#6 [19]	14" [356]	A615 Gr. 60
b4	90	#4 [13]	37" [940]	A615 Gr. 60
b5	40	#6 [19]	19'–0" [5791]	A615 Gr. 60

Note: (1) Quantities in Bill of Bars represent a system with ten barriers.

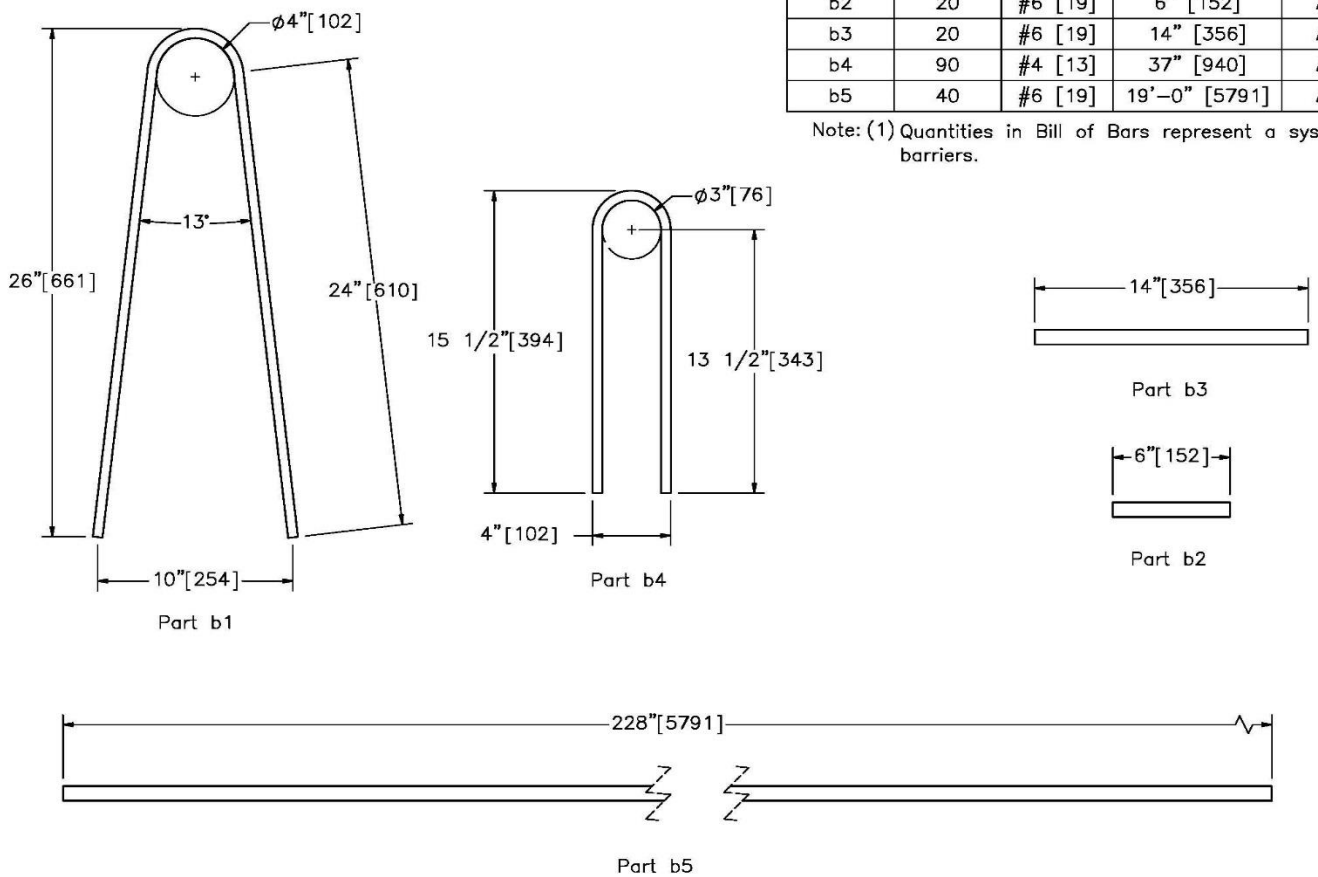

MwRSF Midwest Roadside Safety Facility	NJ Bolted Portable Concrete Barrier Test NJPCB–2		SHEET: 12 of 15
			DATE: 10/30/2018
	Bill of Bars		DRAWN BY: TJD/JEK/DTM/MES/MBD
	DWG. NAME. NJPCB–2_R17	SCALE: 1:8 UNITS: In.[mm]	REV. BY: KAL/TJD/RKF/JCH/SB

Figure 12. PCB Reinforcement Details, Test No. NJPCB-2

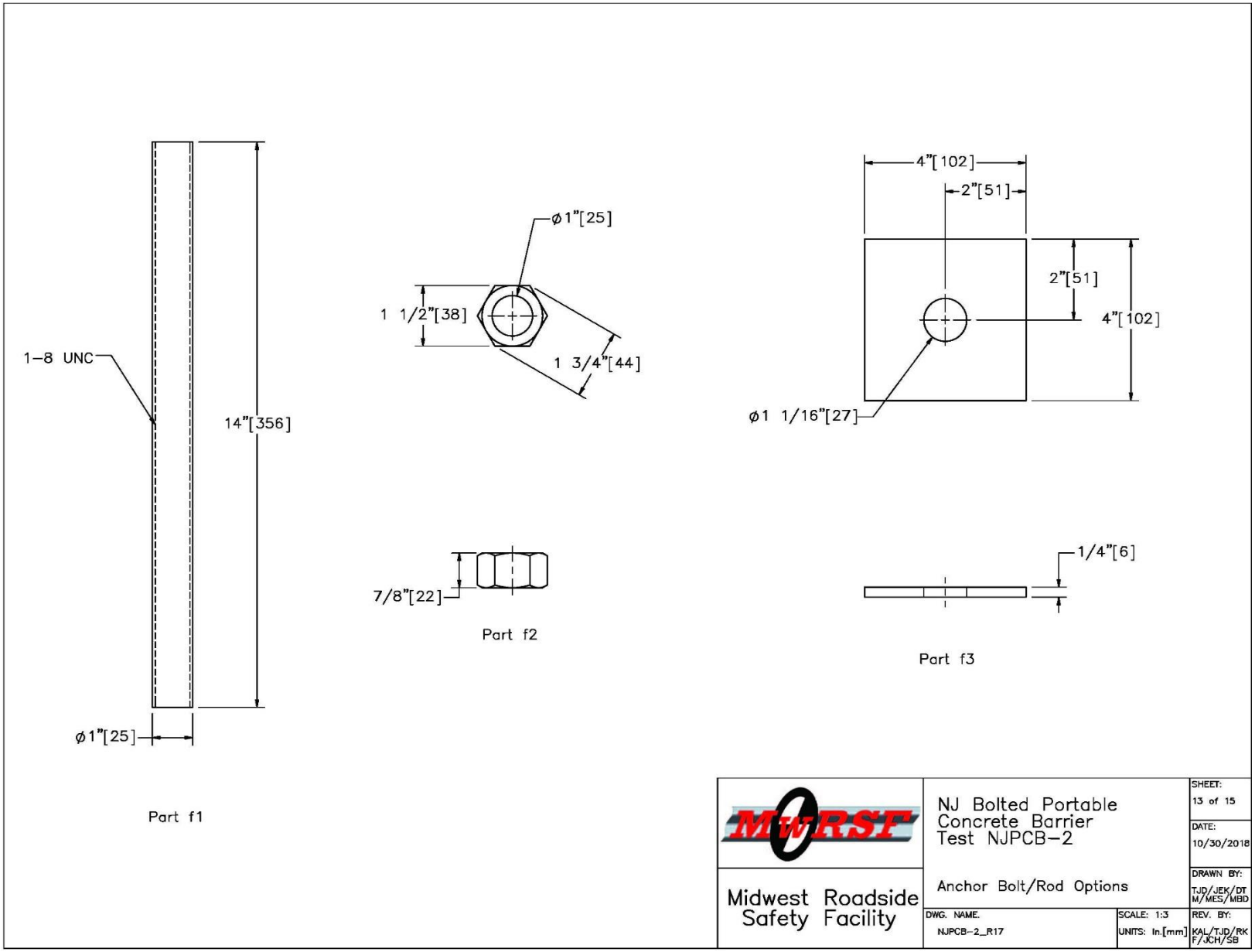

Figure 13. Bolt Anchor Details, Test No. NJPCB-2

(1) Minimum concrete clear cover for reinforcement steel shall be 1 1/2" [38 mm].

(2) All segments shall be bolted.

(3) After a segment has been placed and the connection key inserted, pull the unit in a direction parallel to its longitudinal axis to remove any slack in the joint.

(4) The portable concrete barrier shall be cast in steel forms.

(5) The portable concrete barrier shall be barrier segments of 20 feet [6,096 mm]. However, other lengths may be used to meet field conditions. The number and placement of the b2 and b3 reinforcement steel will vary with the length of the barrier segment as shown on the table of variable reinforcement steel. The b5 reinforcement steel shall be 10" [254 mm] shorter than the nominal length of the barrier segments.

(6) Reinforcing shown is the minimum required. Additional reinforcing necessary for handling shall be the option and responsibility of the contractor.

(7) Welding and fabrication of steel structures shall be in accordance with sections 1 thru 6 of the ANSI/AASHTO/AWS D1.5 bridge welding code and section 10 of the ANSI/AWS D1 structural welding code. Surfaces to be welded shall be free of scale, slag, rust, moisture, grease or any other material that will prevent proper welding or produce objectional fumes. Welding shall be shielded metal arc welding using properly dried 5/32" [4 mm] dia. E7018 electrodes.

(8) The length of the bolts/threaded rods shall be such that a minimum embedment length of 7" [178 mm] is obtained when embedded into concrete pavement. Holes in bridge decks shall be 1 1/4" [32 mm] diameter maximum and made with a core drill or any other approved rotary drilling device that does not impart an impact force.

(9) Use non–shrink grout of a plastic consistency that is listed on the QPL and conforms to ASTM C 1107 with the following amendments:
1. Ensure that the grout has a working time of at least 30 minutes from the time the water is added.
2. Match the color of the hardened grout, where visible, to the color of the adjacent hardened concrete.
3. Include 1–day strength tests as part of the performance requirements of ASTM C 1107.
4. Ensure that the grout contains no more than 0.05 percent chlorides or 5.0 percent sulfates by weight.
5. Minimum 1–day compressive strength of 1,000 psi [6.9 MPa].

(10) Use connection key in every joint. Grout is placed at the toe of each barrier segment between adjacent barrier segments in every joint. Bolt every segment to the concrete tarmac with bolts in every anchor pocket.

MwRSF Midwest Roadside Safety Facility	NJ Bolted Portable Concrete Barrier Test NJPCB–2	SHEET: 14 of 15
		DATE: 10/30/2018
	General Notes	DRAWN BY: TJD/JEK/DTM/MES/MBD
	DWG. NAME. NJPCB–2_R17 / SCALE: None / UNITS: In.[mm]	REV. BY: KAL/TJD/RKF/JCH/SB

Figure 14. General Notes, Test No. NJPCB-2

Item No.	QTY.	Description	Material Spec	Galvanization Spec
a1	10	Concrete Barrier Segment – NJDOT Type 4 Barrier (Alternate B) used as Type 1	Min. f'c = 3,700 psi [25.5 MPa]	–
b1	80	1/2" [13] Dia., 59" [1,499] Long Bent Rebar	ASTM A615 Gr. 60	–
b2	20	3/4" [19] Dia., 6" [152] Long Rebar	ASTM A615 Gr. 60	–
b3	20	3/4" [19] Dia., 14" [356] Long Rebar	ASTM A615 Gr. 60	–
b4	90	1/2" [13] Dia., 37" [940] Long Bent Rebar	ASTM A615 Gr. 60	–
b5	40	3/4" [19] Dia., 228" [5,791] Long Rebar	ASTM A615 Gr. 60	–
c1	20	4"x4"x1/2" [102x102x13] x 20" [508] Long Tube	ASTM A500 Gr. B or C	–
c2	40	40 1/2"x2"x1/4" [1,029x51x6] Bent Steel Plate	ASTM A36	–
c3	20	34 1/2"x2"x1/4" [876x51x6] Bent Steel Plate	ASTM A36	–
d1	18	25 1/2"x2"x1/2" [648x51x13] Steel Plate	ASTM A36	–
d2	9	25 1/2"x2 1/4"x1/2" [648x57x13] Steel Plate	ASTM A36	–
d3	18	6 3/16"x1 3/8"x1/2" [157x35x13] Steel Plate – Stiffener	ASTM A36	–
d4	9	17"x8"x1/2" [432x203x13] Bent Steel Plate – Top Plate	ASTM A36	–
e1	1	Non–Shrink Grout	Min. 1–day Compressive Strength 1,000 psi [6.9 MPa]	–
f1	100	1" [25] Dia. UNC, 14" [356] Long Threaded Rod	ASTM F1554 Gr. 36	* ASTM A153 or B695 Class 55 or F2329
f2	100	1" [25] Dia. UNC Hex Nut	ASTM A563A	* ASTM A153 or B695 Class 55 or F2329
f3	100	4"x4"x1/4" [102x102x6] Square Washer	ASTM A36	* ASTM A123
g1	1	Epoxy Resin	Min. pull out capacity of 20,500 lb [91.2 kN] when embedded in 7" [178] of 3,000 psi [20.7 MPa] concrete. Min. bond strength of 1,461 psi [10.1 MPa]	–

* Component does not need to be galvanized for testing purposes.

Midwest Roadside Safety Facility

NJ Bolted Portable Concrete Barrier Test NJPCB–2

Bill of Materials

SHEET: 15 of 15
DATE: 10/30/2018
DRAWN BY: TJD/JEK/DTM/MES/MBD
DWG. NAME. NJPCB–2_R17
SCALE: None
UNITS: In.[mm]
REV. BY: KAL/TJD/RKF/JCH/SB

Figure 15. Bill of Materials, Test No. NJPCB-2

Figure 16. NJDOT PCB with Bolted Configuration and Grouted Toes Test Installation, Test No. NJPCB-2

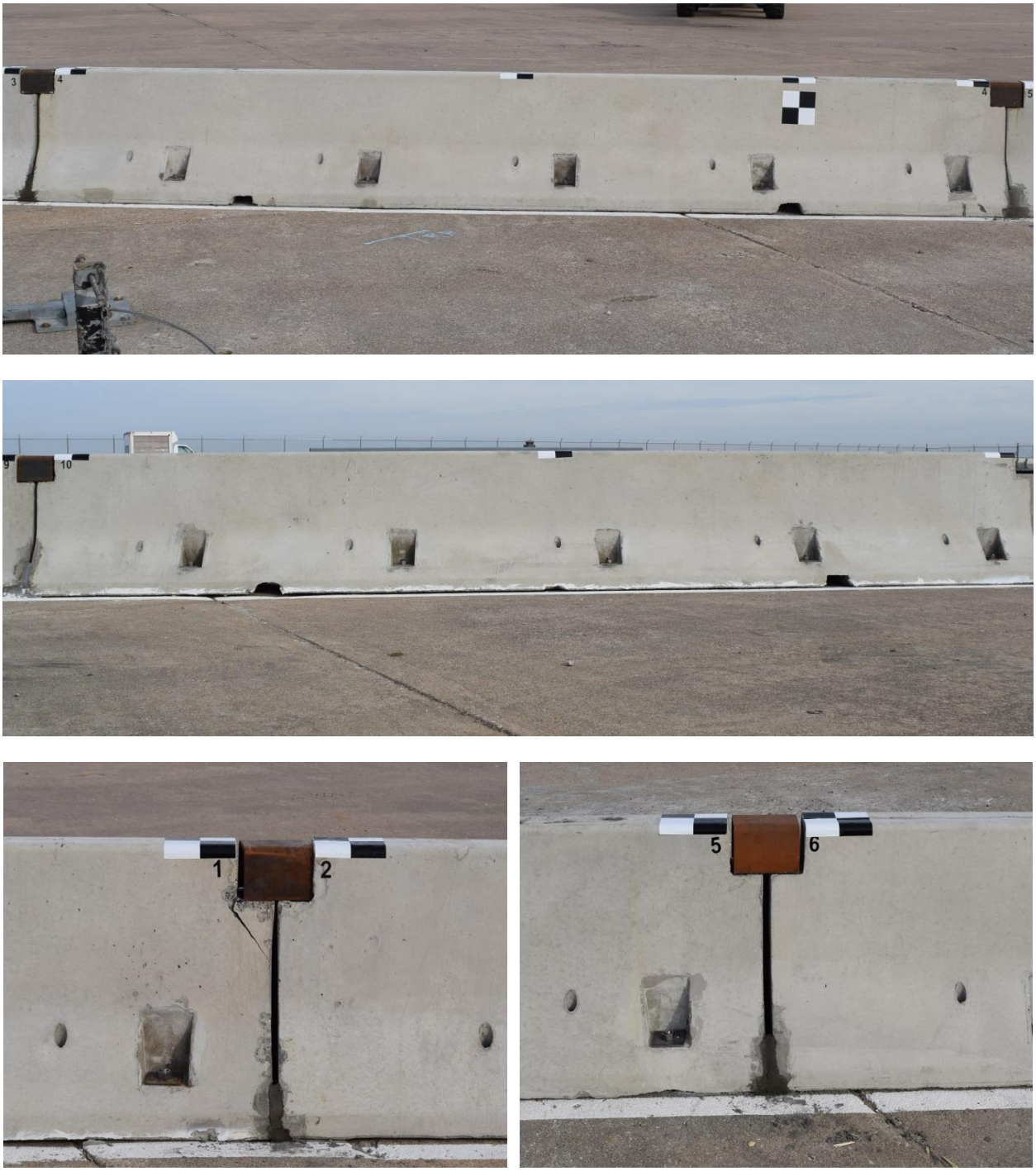

Figure 17. PCB Connection Key and Grout between Barriers, Test No. NJPCB-2

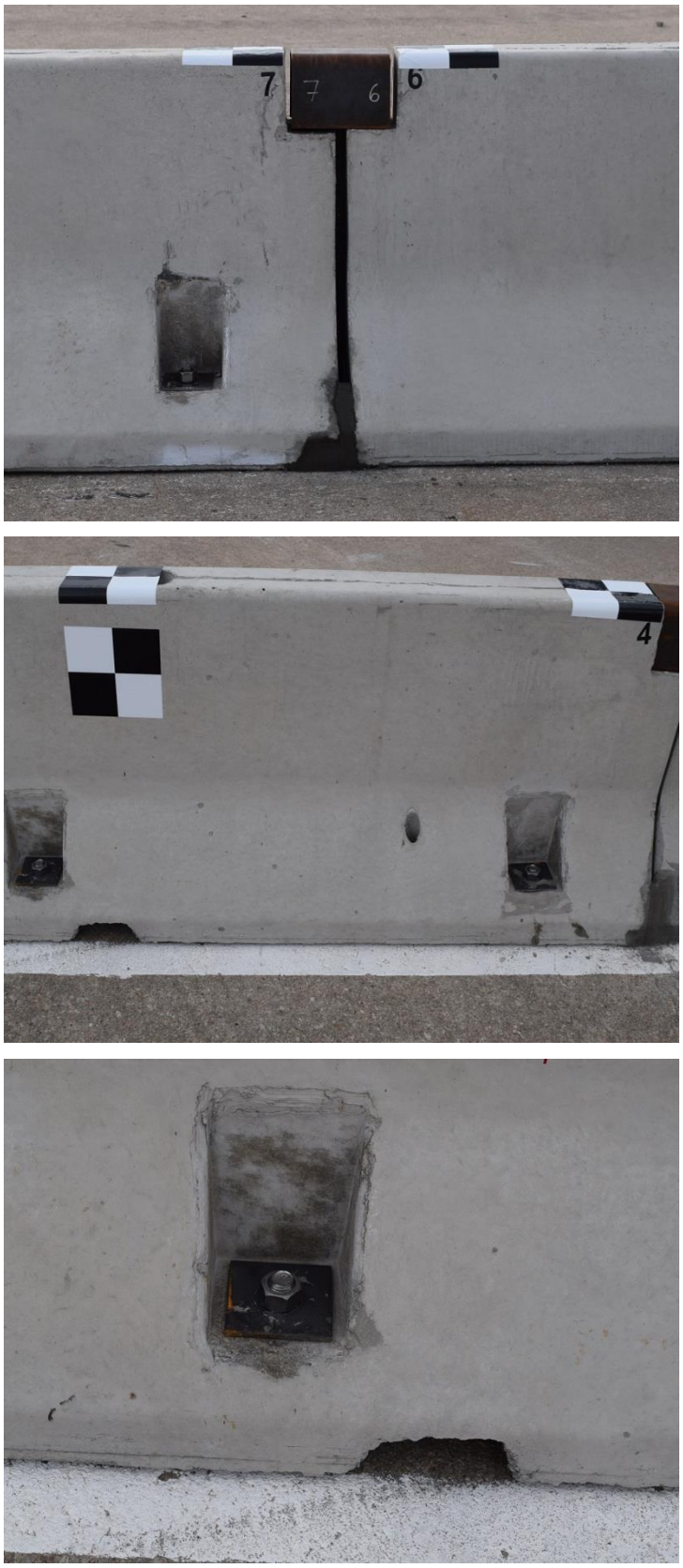

Figure 18. Bolt Anchors, Test No. NJPCB-2

4 TEST CONDITIONS

4.1 Test Facility

The Outdoor Test Site is located at the Lincoln Air Park on the northwest side of the Lincoln Municipal Airport and is approximately 5 miles (8.0 km) northwest of the University of Nebraska-Lincoln.

4.2 Vehicle Tow and Guidance System

A reverse-cable, tow system with a 1:2 mechanical advantage was used to propel the test vehicle. The distance traveled and the speed of the tow vehicle were one-half that of the test vehicle. The test vehicle was released from the tow cable before impact with the barrier system. A digital speedometer on the tow vehicle increased the accuracy of the test vehicle impact speed.

A vehicle guidance system developed by Hinch [12] was used to steer the test vehicle. A guide flag, attached to the right-front wheel and the guide cable, was sheared off before impact with the barrier system. The ⅜-in. (9.5-mm) diameter guide cable was tensioned to approximately 3,500 lb (15.6 kN) and supported both laterally and vertically every 100 ft (30.5 m) by hinged stanchions. The hinged stanchions stood upright while holding up the guide cable, but as the vehicle was towed down the line, the guide flag struck and knocked each stanchion to the ground.

4.3 Test Vehicle

For test no. NJPCB-2, a 2011 Dodge Ram 1500 crew cab pickup truck was used as the test vehicle. The curb, test inertial, and gross static vehicle weights were 5,253 lb (2,383 kg), 4,992 lb (2,264 kg), and 5,157 lb (2,339 kg), respectively. The test vehicle is shown in Figure 19, and vehicle dimensions are shown in Figure 20.

The longitudinal component of the center of gravity (c.g.) was determined using the measured axle weights. The Suspension Method [13] was used to determine the vertical component of the c.g. for the pickup truck. This method is based on the principle that the c.g. of any freely suspended body is in the vertical plane through the point of suspension. The vehicle was suspended successively in three positions, and the respective planes containing the c.g. were established. The intersection of these planes pinpointed the final c.g. location for the test inertial condition. The location of the final c.g. is shown in Figures 20 and 21. Data used to calculate the location of the c.g. and ballast information are shown in Appendix E.

Square, black- and white-checkered targets were placed on the vehicle for reference to be viewed from the high-speed digital video cameras and aid in the video analysis, as shown in Figure 21. Round, checkered targets were placed on the c.g. on the left-side door, the right-side door, and the roof of the vehicle.

The front wheels of the test vehicle were aligned to vehicle standards except the toe-in value was adjusted to zero such that the vehicle would track properly along the guide cable. A 5B flash bulb was mounted under the vehicle's left-side windshield wiper and was fired by a pressure tape switch mounted at the impact corner of the bumper. The flash bulb was fired upon initial impact with the test article to create a visual indicator of the precise time of impact on the high-

speed digital videos. A remote-controlled brake system was installed in the test vehicle to bring the vehicle safely to a stop after the test.

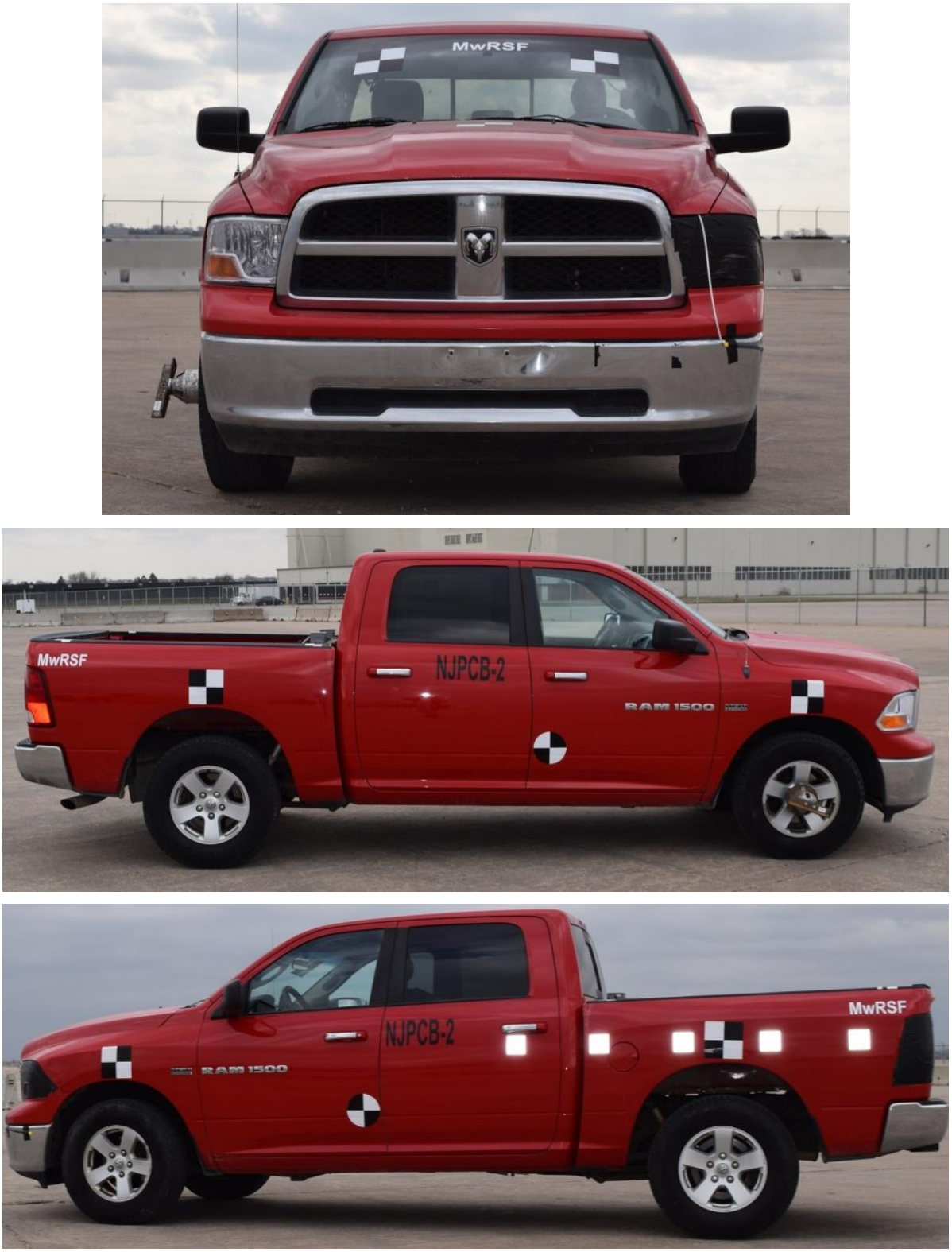

Figure 19. Test Vehicle, Test No. NJPCB-2

Date: 3/23/2016 **Test Number:** NJPCB-2 **Model:** Ram 1500

Make: Dodge **Vehicle I.D.#:** 1d7rb1ct4bs615936

Tire Size: LT265/70R17 **Year:** 2011 **Odometer:** 167324

Tire Inflation Pressure: 40

***(All Measurements Refer to Impacting Side)**

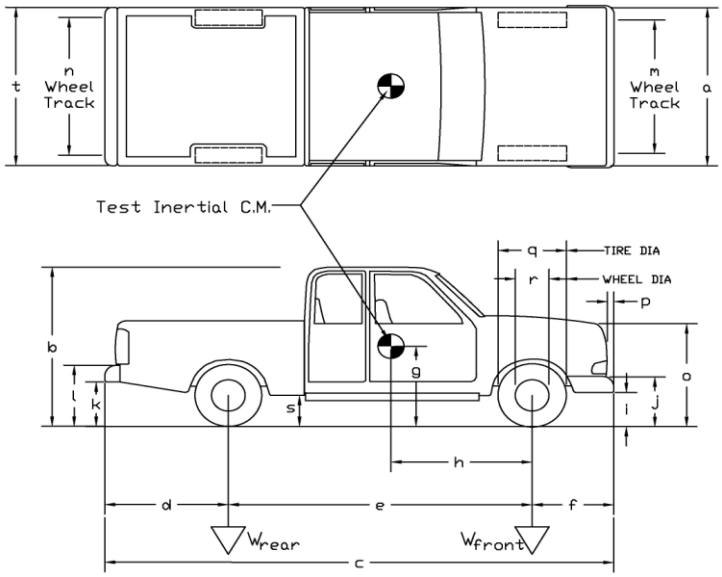

Vehicle Geometry -- in. (mm)

a	76 7/8	(1953)	b	74 3/8	(1889)
c	229 1/8	(5820)	d	45 1/2	(1156)
e	140 3/8	(3566)	f	43 1/4	(1099)
g	28 3/8	(721)	h	61	(1551)
i	13	(330)	j	25 5/8	(651)
k	21	(533)	l	29 5/8	(752)
m	67 3/4	(1721)	n	67 1/2	(1715)
o	46 1/4	(1175)	p	4	(102)
q	30 3/4	(781)	r	18 3/8	(467)
s	14 1/8	(359)	t	76 1/4	(1937)

Wheel Center Height Front	14 7/8	(378)
Wheel Center Height Rear	15 3/8	(391)
Wheel Well Clearance (F)	35 1/2	(902)
Wheel Well Clearance (R)	38	(965)
Frame Height (F)	19 1/8	(486)
Frame Height (R)	26 3/8	(670)

Mass Distribution lb (kg)

Gross Static	LF	1488	(675)	RF	1440	(653)
	LR	1082	(491)	RR	1147	(520)

Engine Type Gasoline

Engine Size Hemi 5.7 V8

Transmission Type: Automatic

Drive Type: RWD

Weights lb (kg)	Curb		Test Inertial		Gross Static	
W-front	2679	(1215)	2821	(1280)	2928	(1328)
W-rear	2574	(1168)	2171	(985)	2229	(1011)
W-total	5253	(2383)	4992	(2264)	5157	(2339)

GVWR Ratings

Front	3700
Rear	3900
Total	6800

Dummy Data

Type: Hybrid II

Mass: 166 lb

Seat Position: Driver

Note any damage prior to test: Scrape/Dent on back of tailgate above the handle

Figure 20. Vehicle Dimensions, Test No. NJPCB-2

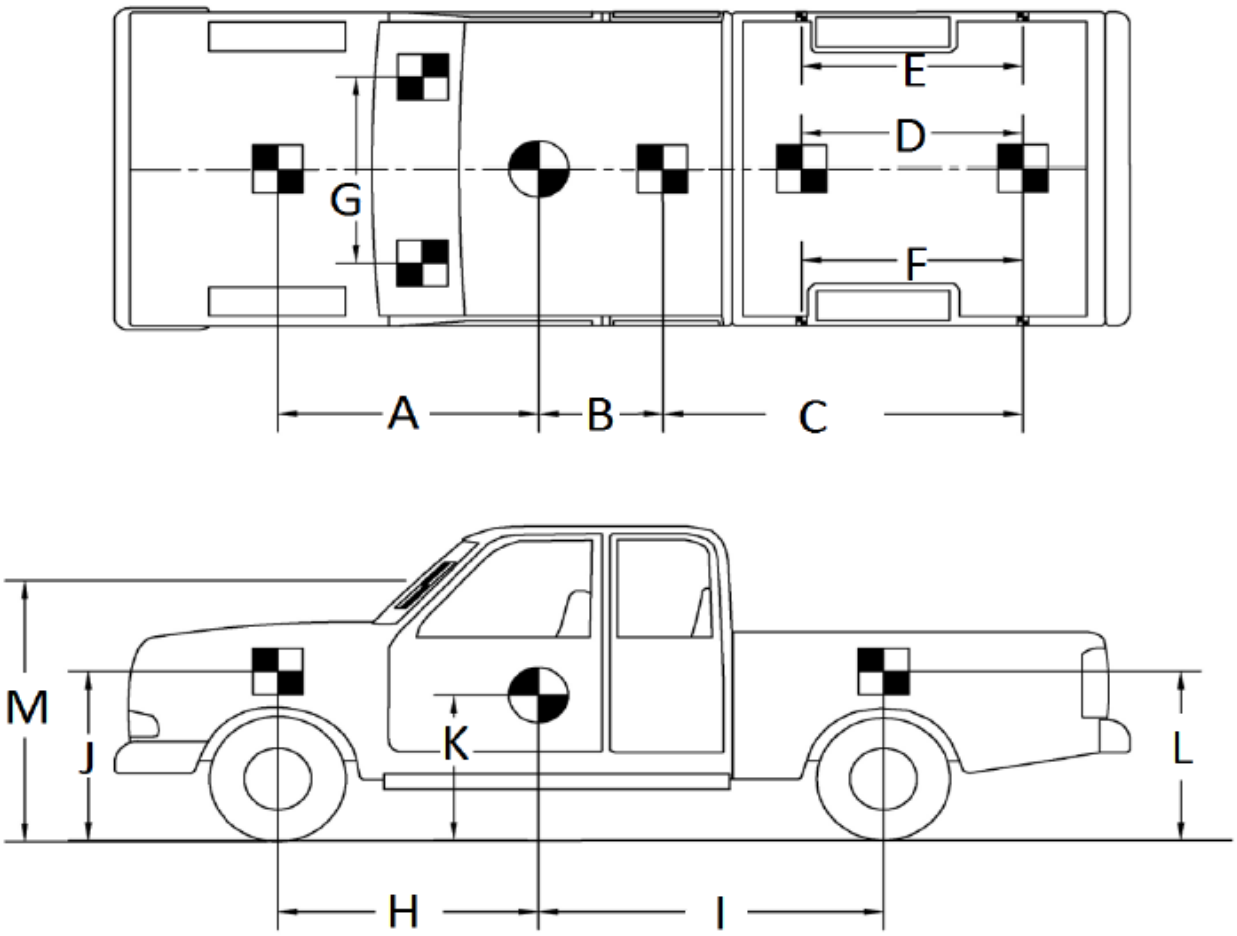

TEST #: NJPCB-2

TARGET GEOMETRY-- in. (mm)

A	69 5/8	(1768)	E	58 1/2	(1486)	J	39 3/4	(1010)
B	26 1/2	(673)	F	58 1/2	(1486)	K	28 1/8	(714)
C	83 5/8	(2124)	G	34 5/8	(879)	L	42 3/4	(1086)
D	48 1/8	(1222)	H	60 7/8	(1546)	M	65 1/8	(1654)
			I	79 1/2	(2019)			

Figure 21. Target Geometry, Test No. NJPCB-2

4.4 Simulated Occupant

For test no. NJPCB-2, A Hybrid II 50th-Percentile, Adult Male Dummy, equipped with clothing and footwear, was placed in the left-front seat of the test vehicle with the seat belt fastened. The dummy, which had a final weight of 166 lb (75 kg), was represented by model no. 572, serial no. 451, and was manufactured by Android Systems of Carson, California. As recommended by MASH 2009, the dummy was not included in calculating the c.g. location.

4.5 Data Acquisition Systems

4.5.1 Accelerometers

Two environmental shock and vibration sensor/recorder systems were used to measure the accelerations in the longitudinal, lateral, and vertical directions. Both accelerometers were mounted near the c.g. of the test vehicle. The electronic accelerometer data obtained in testing was filtered using the SAE Class 60 and the SAE Class 180 Butterworth filter conforming to the SAE J211/1 specifications [14].

The two systems, the SLICE-1 and SLICE-2 units, were modular data acquisition systems manufactured by Diversified Technical Systems, Inc. (DTS) of Seal Beach, California. The SLICE-2 unit was designated as the primary system. The acceleration sensors were mounted inside the bodies of custom-built, SLICE 6DX event data recorders and recorded data at 10,000 Hz to the onboard microprocessor. Each SLICE 6DX was configured with 7 GB of non-volatile flash memory, a range of ±500 g's, a sample rate of 10,000 Hz, and a 1,650 Hz (CFC 1000) anti-aliasing filter. The "SLICEWare" computer software programs and a customized Microsoft Excel worksheet were used to analyze and plot the accelerometer data.

4.5.2 Rate Transducers

Two identical, angular rate sensor systems, which were mounted inside the bodies of the SLICE-1 and SLICE-2 event data recorders, measured the rates of rotation of the test vehicle. Each SLICE MICRO Triax ARS had a range of 1,500 degrees/sec in each of the three directions (roll, pitch, and yaw) and recorded data at 10,000 Hz to the onboard microprocessors. The raw data measurements were then downloaded, converted to the proper Euler angles for analysis, and plotted. The "SLICEWare" computer software program and a customized Microsoft Excel worksheet were used to analyze and plot the angular rate sensor data.

4.5.3 Retroreflective Optic Speed Trap

The retroreflective optic speed trap was used to determine the speed of the test vehicle before impact. Five retroreflective targets, spaced at approximately 18-in. (457-mm) intervals, were applied to the side of the vehicle. When the emitted beam of light was reflected by the targets and returned to the Emitter/Receiver, a signal was sent to the data acquisition computer, recording at 10,000 Hz, as well as the external LED box activating the LED flashes. The speed was then calculated using the spacing between the retroreflective targets and the time between the signals. LED lights and high-speed digital video analysis are only used as a backup in the event that vehicle speed cannot be determined from the electronic data.

4.5.4 Digital Photography

Five AOS high-speed digital video cameras, ten GoPro digital video cameras, and three JVC digital video cameras were utilized to film test no. NJPCB-2. Camera details, camera operating speeds, lens information, and a schematic of the camera locations relative to the system are shown in Figure 22.

The high-speed digital videos were analyzed using ImageExpress MotionPlus and RedLake MotionScope software programs. Actual camera speed and camera divergence factors were considered in the analysis of the high-speed digital videos. A Nikon digital still camera was also used to document pre- and post-test conditions for the test.

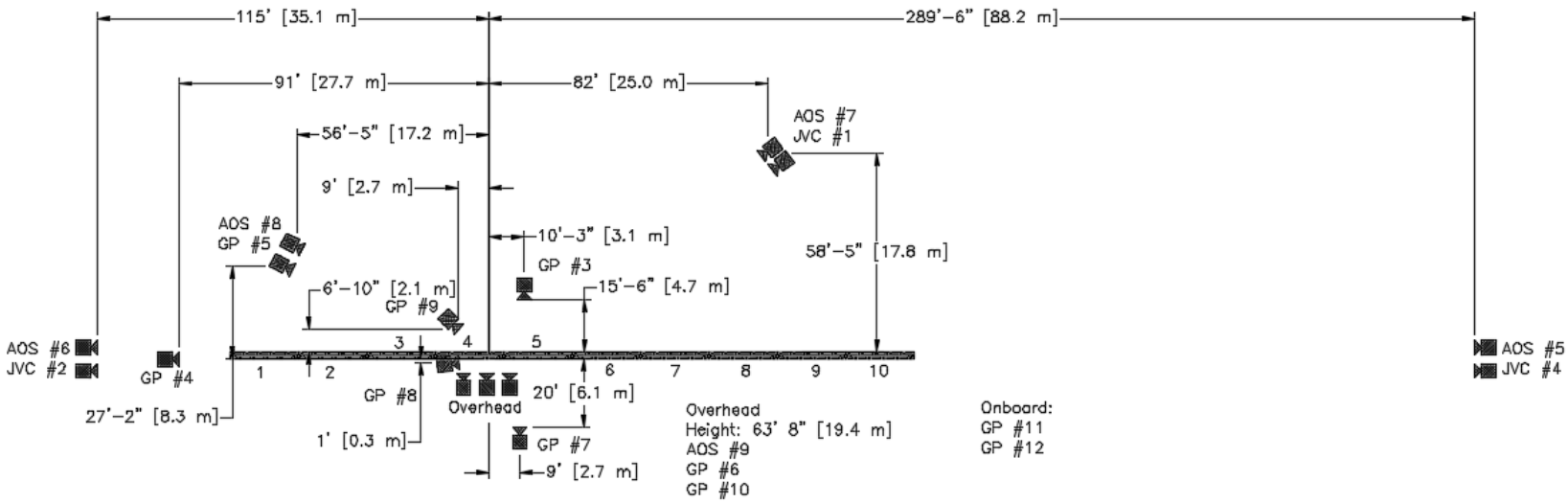

No.	Type	Operating Speed (frames/sec)	Lens	Lens Setting
AOS-5	AOS X-PRI Gigabit	500	VIVITAR 135mm Fixed	-
AOS-6	AOS X-PRI Gigabit	500	NIKON 28-70	35
AOS-7	AOS X-PRI Gigabit	500	Fujinon 50mm Fixed	-
AOS-8	AOS S-VIT 1531	500	SIGMA 28-70 DG	35
AOS-9	AOS TRI-VIT	500	KOWA 12mm Fixed	-
GP-3	GoPro Hero 3+	120		
GP-4	GoPro Hero 3+	120		
GP-5	GoPro Hero 3+	120		
GP-6	GoPro Hero 3+	120		
GP-7	GoPro Hero 4	240		
GP-8	GoPro Hero 4	240		
GP-9	GoPro Hero 4	120		
GP-10	GoPro Hero 4	240		
GP-11	GoPro Hero 4	120		
GP-12	GoPro Hero 4	120		
JVC-1	JVC – GZ-MC500 (Everio)	29.97		
JVC-2	JVC – GZ-MG27u (Everio)	29.97		
JVC-4	JVC – GZ-MG27u (Everio)	29.97		

Figure 22. Camera Locations, Speeds, and Lens Settings, Test No. NJPCB-2

5 FULL-SCALE CRASH TEST NO. NJPCB-2

5.1 Weather Conditions

Test no. NJPCB-2 was conducted on April 1, 2016 at approximately 12:30 p.m. The weather conditions as per the National Oceanic and Atmospheric Administration (station 14939/LNK) were reported and are shown in Table 5.

Table 5. Weather Conditions, Test No. NJPCB-2

Temperature	40° F
Humidity	82%
Wind Speed	18 mph
Wind Direction	310° from True North
Sky Conditions	Overcast
Visibility	8 Statute Miles
Pavement Surface	Dry
Previous 3-Day Precipitation	0.02 in.
Previous 7-Day Precipitation	0.35 in.

5.2 Test Description

The 4,992-lb (2,264-kg) pickup truck impacted the NJDOT PCB, Type 4 (Alternative B) with a bolted configuration and grouted toes, corresponding to joint class D, as specified in the 2013 NJDOT *Roadway Design Manual*, at a speed of 62.6 mph (100.7 km/h) and at an angle of 24.5 degrees. A summary of the test results and sequential photographs are shown in Figure 24. Additional sequential photographs are shown in Figures 25 and 26. Documentary photographs of the crash test are shown in Figure 27.

Initial vehicle impact was to occur 4 ft – $3^{3}/_{16}$ in. (1.3 m) upstream from the centerline of the joint between barrier nos. 4 and 5, as shown in Figure 28, which was selected using Table 2.6 of MASH 2009. The actual point of impact was 5⅜ in. (137 mm) downstream from the target location. A sequential description of the impact events is contained in Table 6. The vehicle came to rest 182 ft – 1 in. (55.5 m) downstream from point of impact and 89 ft – 3 in. (27.2 m) laterally behind the traffic side of the barrier, after the brakes were applied. The vehicle trajectory and final position are shown in Figure 29.

Table 6. Sequential Description of Impact Events, Test No. NJPCB-2

TIME (sec)	EVENT
0.000	Vehicle's left-front tire impacted barrier no. 4 at 3 ft – $9^{13}/_{16}$ in. (1.2 m) upstream from centerline of joint between barrier nos. 4 and 5.
0.002	Vehicle's left-front bumper vehicle impacted barrier no. 4.
0.006	Left corner of front bumper deformed inward.

0.012	Left side of fender contacted front face of barrier no. 4 and deformed inward. Left headlight deformed.
0.024	Vehicle's hood and grille contacted downstream end of barrier no. 4 and deformed.
0.030	Right fender deformed as bumper deflected inward.
0.036	Vehicle's left-front door deformed inward.
0.042	Vehicle's airbags deployed.
0.050	Vehicle's left-rear door contacted front face of barrier no. 4 and deformed. Vehicle yawed away from system.
0.058	Right headlight deformed.
0.060	Toe of barrier no. 4 at downstream end deflected backward.
0.068	Grille detached from vehicle.
0.070	Front of vehicle pitched upward, and vehicle redirected.
0.072	Downstream end of barrier no. 4 cracked.
0.074	Top of the system deflected backward.
0.084	Toe of barrier no. 5 at upstream end deflected backward.
0.090	Upstream end of barrier no. 5 cracked.
0.118	Vehicle's right-front tire became airborne.
0.196	Vehicle's rear bumper contacted system and deformed inward.
0.210	Vehicle was parallel to system at a speed of 45.5 mph (73.3 km/h).
0.218	Vehicles' right-rear tire became airborne.
0.224	Right headlight detached away from vehicle.
0.272	Vehicle pitched downward.
0.356	Vehicle lost contact with system at a speed of 44.6 mph (71.8 km/h) and at an angle of 9.9 degrees.
0.360	System came to rest.
0.570	Vehicle's right-front tire regained contact with ground.
0.734	Vehicle rolled slightly toward system.
0.868	Vehicle pitched upward.
0.934	Vehicle's left-front tire regained contact with ground.
1.054	Vehicle's right-rear tire regained contact with ground.
1.062	Vehicle rolled slightly away from system.
1.078	Vehicle yawed toward system.
1.194	Vehicle pitched downward.
1.468	Vehicle rolled slightly toward system.

5.3 Barrier Damage

Damage to the barrier was moderate, as shown in Figures 30 through 34. Barrier damage consisted of contact marks on the front face of the PCB segments, spalling of the concrete, and concrete cracking and fracture. The length of vehicle contact along the barrier was approximately 22 ft – 7½ in. (6.9 m), which spanned from 6 ft – 4½ in. (1.9 m) upstream from the center of the joint between barrier nos. 4 and 5 through 16 ft – 3 in. (5.0 m) downstream from the center of the joint between barrier nos. 4 and 5.

Tire marks were visible on the front face of barrier nos. 4 and 5. Scrape marks were also found on the front and top faces of barrier nos. 4 and 5. The upper corner at the downstream end of barrier no. 4 was fractured. Anchor nos. 9 and 10 on barrier no. 4 and anchor nos. 1, 2, 3, and 7 on barrier no. 5 experienced minor fractures beneath the square anchor washers.

A 32-in. (813-mm) long crack on the front face of barrier no. 4 extended vertically from bolt anchor no. 8. A 17-in. (432-mm) long crack on the front face extended vertically from the upstream end of barrier no. 4. A small gouge was found 26 in. (660 mm) upstream from the downstream end of barrier no. 4. An 18-in. × 4½-in. (457-mm × 114-mm) gouge was found 25 in. (635 mm) upstream from the downstream end of barrier no. 4. Small gouges and scratches were located across the front faces of barrier nos. 4 and 5. A 30-in. (762-mm) long crack was found on barrier no. 5 extending upward and downstream from anchor pocket no. 6. A semi-circular shaped crack extended 46 in. (1,168 mm) longitudinally and 13 in. (330 mm) vertically, located 49 in. (1,245 mm) downstream of the upstream end of barrier no. 5.

Concrete spalling and cracking occurred at the downstream end of barrier no. 4 and upstream end of barrier no. 5. An 18-in. × 6½-in. × 9-in. (457-mm × 165-mm × 229-mm) piece of concrete was removed from the top of barrier no. 4 and was located at 20 in. (508 mm) longitudinally from the impact point. Concrete spalling occurred underneath bolt anchor no. 10 on barrier no. 4. Concrete spalling measuring 8-in. × 10-in. (203-mm × 254-mm) occurred at the downstream end of barrier no. 4 on the back side. An 8-in. × 5-in. × 2-in. (203-mm × 127-mm × 51-mm) piece of concrete was removed from the upper-upstream corner on the back side of barrier no. 5 below the connection key socket. Concrete spalling measuring 13 in. × 7 in. (330 mm × 178 mm) was found 23 in. (584 mm) downstream from the upstream end on the front side of barrier no. 5.

The maximum permanent set deflection of the barrier system was –½ in. (–13 mm) at the upstream end of barrier no. 5, as measured in the field, due to its forward movement. The maximum lateral dynamic barrier deflection, including tipping of the barrier along the top surface, was 4.9 in. (125 mm) at the downstream end of barrier no. 4, as determined from high-speed digital video analysis. The working width of the system was found to be 24.0 in. (610 mm), also determined from high-speed digital video analysis. A schematic of the permanent set deflection, dynamic deflection, and working width is shown in Figure 23. In addition, NJDOT identifies the clear space behind the barrier, which is defined as the maximum deflection of the back of the barrier from its original position. For this test, the clear space behind the barrier was 0 in. (0 mm).

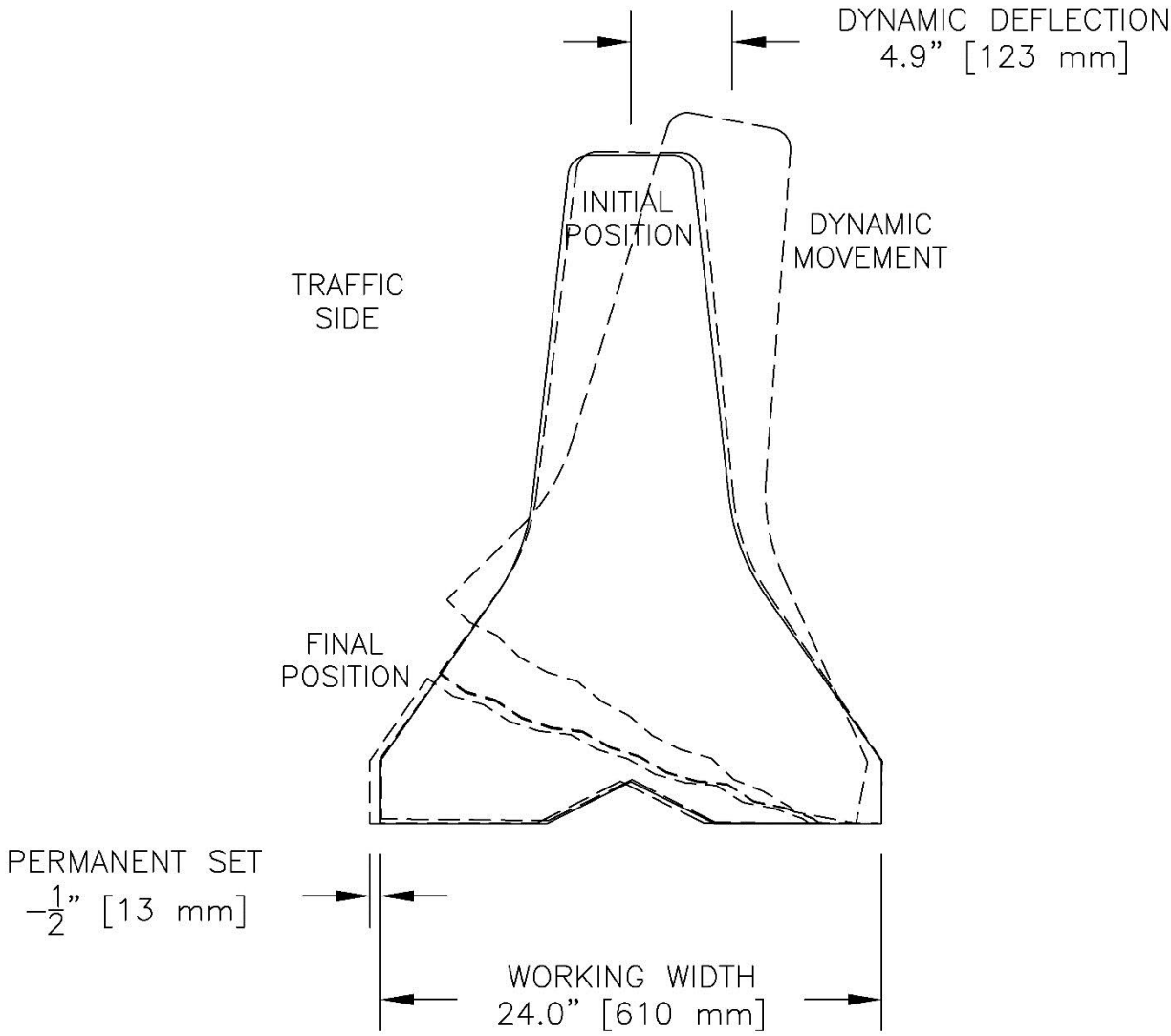

Figure 23. Permanent Set Deflection, Dynamic Deflection and Working Width, Test No. NJPCB-2

5.4 Vehicle Damage

The damage to the vehicle was moderate, as shown in Figures 35 through 39. The maximum occupant compartment deformations are listed in Table 7 along with the deformation limits established in MASH 2009 for various areas of the occupant compartment. Note that none of the MASH 2009 established deformation limits were violated. Complete occupant compartment and vehicle deformations and the corresponding locations are provided in Appendix F.

The majority of the damage was concentrated on the left-front corner and the left side of the vehicle where impact had occurred. The left side of the front bumper crushed inward and back. The plastic bumper was partially disengaged from the left side, but it was still connected on the right side. The lower steel bumper was bent 33 in. (838 mm) inward at the center and extending toward the left corner. The grille disengaged from the bumper. The front of the hood had a 2-in. (51-mm) gap on the left side. The left-front fender was pushed upward near the door panel and

dented and torn behind the left-front wheel. The left-front steel rim had a fracture approximately 13 in. (330 mm) long with tears and significant crushing. The left-front tire was torn and deformed. The left-front headlight casing and right-front headlight disengaged away from the vehicle. The hood and fender were separated by 3 in. (76 mm), and the left fender was crushed 2 in. (51 mm) inward. Denting and scraping were observed on the entire left side. There was a 1-in. (25-mm) gap between the left-front fender and the left-front door. The left-front door was ajar, and creases were found in the door's sheet metal. A 10-in. (254-mm) long kink was found 19 in. (483 mm) upward on the rear of the left-front door. A 17-in. × 7-in. (432-mm × 178-mm) dent was found near the door handle of left-front door. A 4-in. (102-mm) diameter dent was found on the rear of the left fender. Crush along the entire bottom length of the cab was found expanding 10 in. (254 mm) vertically upward. The left-rear door was dented and was ajar approximately 1 in. (25 mm) at the top. Contact marks were found on the left-rear quarter panel. The left side of the rear bumper experienced kinking and denting. The left-rear steel rim was scraped, and scuff marks were found on the tire.

Scraping was found on the left-front lower control arm and on the transmission cross member. The left-front frame rail was crushed at the front engine cross member. The left-front spring was twisted and the lower mount was scraped. The left-front upper ball joint of the steering knuckle assembly failed, but the lower ball joint was still attached. The right side of the windshield had hairline cracks originating from the right-bottom corner. A 12-in. (305-mm) diameter spider crack was found in the right-middle of the windshield, and the lower-left side of the windshield encountered minor cracking. The roof and remaining window glass remained undamaged.

Table 7. Maximum Occupant Compartment Deformations by Location

LOCATION	MAXIMUM DEFORMATION in. (mm)	MASH 2009 ALLOWABLE DEFORMATION in. (mm)
Wheel Well & Toe Pan	5⅝ (143)	≤ 9 (229)
Floor Pan & Transmission Tunnel	¾ (19)	≤ 12 (305)
Side Front Panel (in Front of A-Pillar)	1¾ (44)	≤ 12 (305)
Side Door (Above Seat)	4⅞ (124)	≤ 9 (229)
Side Door (Below Seat)	4⅛ (105)	≤ 12 (305)
Roof	⅜ (10)	≤ 4 (102)
Windshield	0 (0)	≤ 3 (76)
Side Window	Intact	No shattering resulting from contact with structural member of test article
Dash	⅜ (10)	N/A

N/A – Not applicable

5.5 Occupant Risk

The calculated occupant impact velocities (OIVs) and maximum 0.010-sec occupant ridedown accelerations (ORAs) in both the longitudinal and lateral directions are shown in Table 8. Note that the OIVs and ORAs were within the suggested limits provided in MASH 2009. The calculated THIV, PHD, and ASI values are also shown in Table 8. The results of the occupant risk analysis, as determined from the accelerometer data, are summarized in Figure 24. The recorded data from the accelerometers and the rate transducers are shown graphically in Appendix G. Note that SLICE-1 unit was placed behind the primary SLICE-2 unit, so the placement of units can cause variations in data gathered. Vehicle roll magnitude on the SLICE-2 unit showed 20.7 degrees, while the SLICE-1 unit showed −20.7 degrees, as shown in Appendix G.

Table 8. Summary of OIV, ORA, THIV, PHD, and ASI Values, Test No. NJPCB-2

Evaluation Criteria		**Transducer**		**MASH 2009 Limits**
		SLICE-1	**SLICE-2 (primary)**	
OIV ft/s (m/s)	Longitudinal	-17.85 (-5.44)	-16.66 (-5.08)	± 40 (12.2)
	Lateral	21.24 (6.47)	24.06 (7.33)	± 40 (12.2)
ORA g's	Longitudinal	-9.71	-10.05	± 20.49
	Lateral	9.30	9.99	± 20.49
MAX. ANGULAR DISPL. deg.	Roll	-20.7	20.7	± 75
	Pitch	-11.1	-12.0	± 75
	Yaw	31.7	30.1	not required
THIV ft/s (m/s)		27.52 (8.39)	27.99 (8.53)	not required
PHD g's		11.38	11.76	not required
ASI		1.38	1.56	not required

5.6 Discussion

Analysis of the test results showed that the system adequately contained and redirected the 2270P vehicle with controlled lateral displacements of the barrier. Detached elements, fragments, or other debris from the test article did not penetrate or show potential for penetrating the occupant compartment, or present an undue hazard to other traffic, pedestrians, or work-zone personnel. Deformations of, or intrusions into, the occupant compartment that could have caused serious injury did not occur. The test vehicle did not penetrate nor ride over the barrier and remained upright during and after the collision. Vehicle roll, pitch, and yaw angular displacements, as shown in Appendix G, were deemed acceptable because they did not adversely influence occupant risk safety criteria nor cause rollover. After impact, the vehicle exited the barrier at an angle of 9.9 degrees, and its trajectory did not violate the bounds of the exit box. Therefore, test no. NJPCB-2 was determined to be acceptable according to the MASH 2009 safety performance criteria for test designation no. 3-11.

0.000 sec 0.036 sec 0.090 sec 0.224 sec 0.360 sec

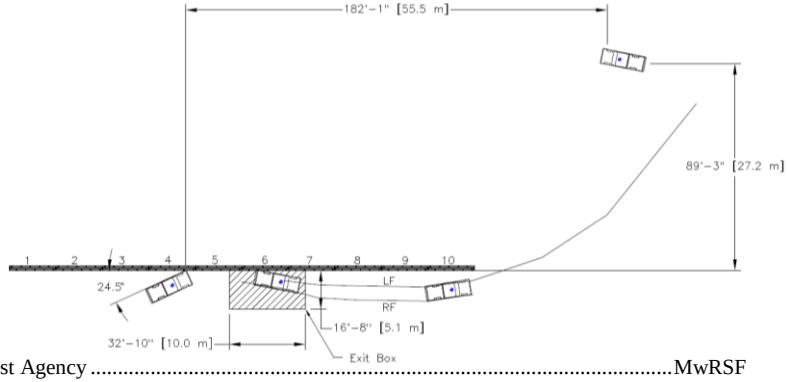

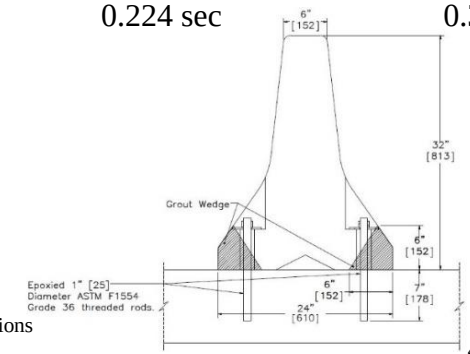

- Test Agency ..... MwRSF
- Test Number NJPCB-2
- Date 04/01/2016
- MASH 2009 Test Designation 3-11
- Test Article ..... NJDOT PCB with Bolted Configuration and Grouted Toes
- Total Length ..... 200 ft (61.0 m)
- Key Component – NJDOT PCB
  - Length ..... 20 ft (6.1 m)
  - Width ..... 24 in. (610 mm)
  - Height ..... 32 in. (813 mm)
- Key Component – Bolt Anchors
  - Rod Size & Length ..... 1-in. (25-mm) diameter × 14-in. (356-mm) long threaded rod
  - Rod Material ..... ASTM F1554 Grade 36 steel
  - Embedment Depth ..... 7 in. (178 mm)
  - Number of Bolted Barriers 10
  - Number of Bolts per Barrier 10
  - Epoxy Minimum Bond Strength ..... 1,461 psi (10.1 MPa)
- Key Component – Grout
  - Specification ..... Min. 1-day compressive strength 1,000 psi (6.9 MPa)
  - Location ..... Toes at joints between barrier nos. 1-10 on traffic and back sides
- Type of Support Surface ..... Concrete Tarmac
- Vehicle Make /Model ..... 2011 Dodge Ram 1500 crew cab pickup truck
  - Curb ..... 5,253 lb (2,383 kg)
  - Test Inertial ..... 4,992 lb (2,264 kg)
  - Gross Static ..... 5,157 lb (2,339 kg)
- Impact Conditions
  - Speed ..... 62.6 mph (100.7 km/h)
  - Angle ..... 24.5 deg
  - Impact Location ..... $45^{13}/_{16}$ in. (1.2 m) upstream from joint 4-5
- Impact Severity ..... 112.6 kip-ft (152.6 kJ) > 105.6 kip-ft (143.1 kJ) limit in MASH 2009
- Exit Conditions
  - Speed ..... 44.6 mph (71.8 km/h)
  - Angle ..... 9.9 deg
  - Exit Box Criterion ..... Pass
- Vehicle Stability ..... Satisfactory
- Vehicle Stopping Distance ..... 182 ft – 1 in. (55.5 m) downstream
  89 ft – 3 in. (27.2 m) laterally behind
- Vehicle Damage ..... Moderate
  - VDS [15] 11-LFQ-4
  - CDC [16] 11-LYEW-4
  - Maximum Interior Deformation ..... 5⅞ in. (143 mm)
- Test Article Damage ..... Moderate
- Maximum Test Article Deflections
  - Permanent Set ..... -½ in. (-13 mm) - Forward
  - Dynamic ..... 4.9 in. (125 mm)
  - Working Width ..... 24.0 in. (610 mm)
- Transducer Data

Evaluation Criteria		Transducer		MASH 2009 Limits
		SLICE-1	SLICE-2 (primary)	
OIV ft/s (m/s)	Longitudinal	-17.85 (-5.44)	-16.66 (-5.08)	± 40 (12.2)
	Lateral	21.24 (6.47)	24.06 (7.33)	± 40 (12.2)
ORA g's	Longitudinal	-9.71	-10.05	± 20.49
	Lateral	9.30	9.99	± 20.49
MAX ANGULAR DISP. deg.	Roll	-20.7	20.7	± 75
	Pitch	-11.1	-12.0	± 75
	Yaw	31.7	30.1	Not required
THIV – ft/s (m/s)		27.52 (8.39)	27.99 (8.53)	Not required
PHD – g's		11.38	11.76	Not required
ASI		1.38	1.56	Not required

Figure 24. Summary of Test Results and Sequential Photographs, Test No. NJPCB-2

0.000 sec

0.068 sec

0.210 sec

0.570 sec

0.934 sec

1.468 sec

0.000 sec

0.074 sec

0.196 sec

0.570 sec

0.868 sec

1.468 sec

Figure 25. Additional Sequential Photographs, Test No. NJPCB-2

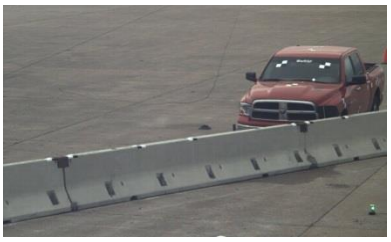
0.000 sec

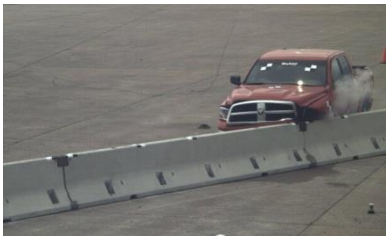
0.042 sec

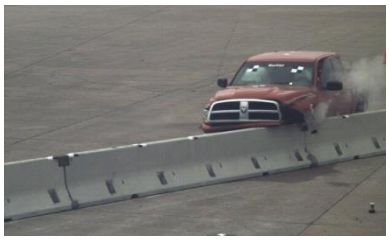
0.068 sec

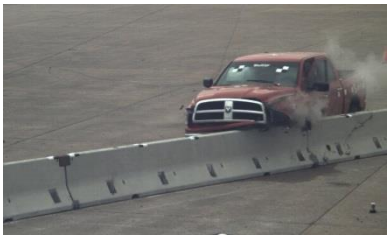
0.090 sec

0.224 sec

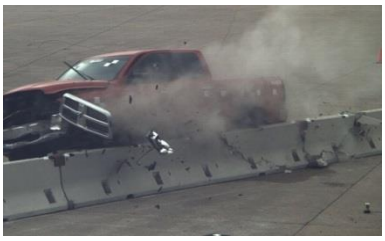
0.272 sec

0.000 sec

0.036 sec

0.060 sec

0.084 sec

0.272 sec

1.078 sec

Figure 26. Additional Sequential Photographs, Test No. NJPCB-2

Figure 27. Documentary Photographs, Test No. NJPCB-2

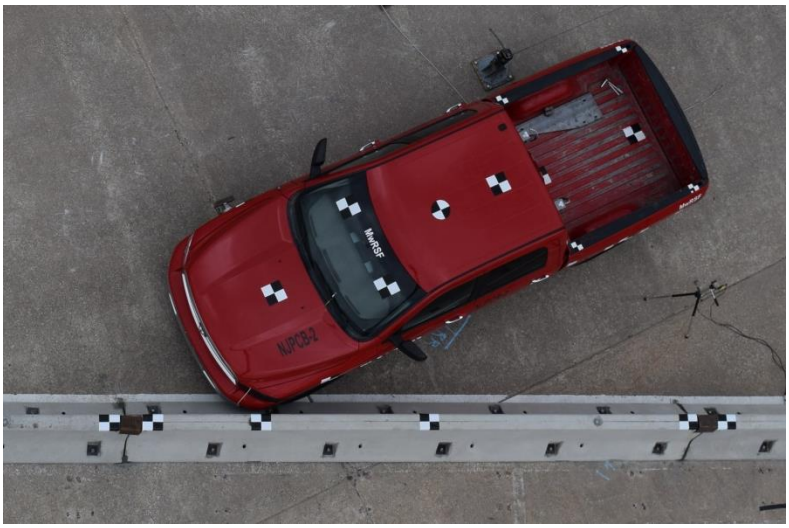

Figure 28. Impact Location, Test No. NJPCB-2

Figure 29. Vehicle Final Position and Trajectory Marks, Test No. NJPCB-2

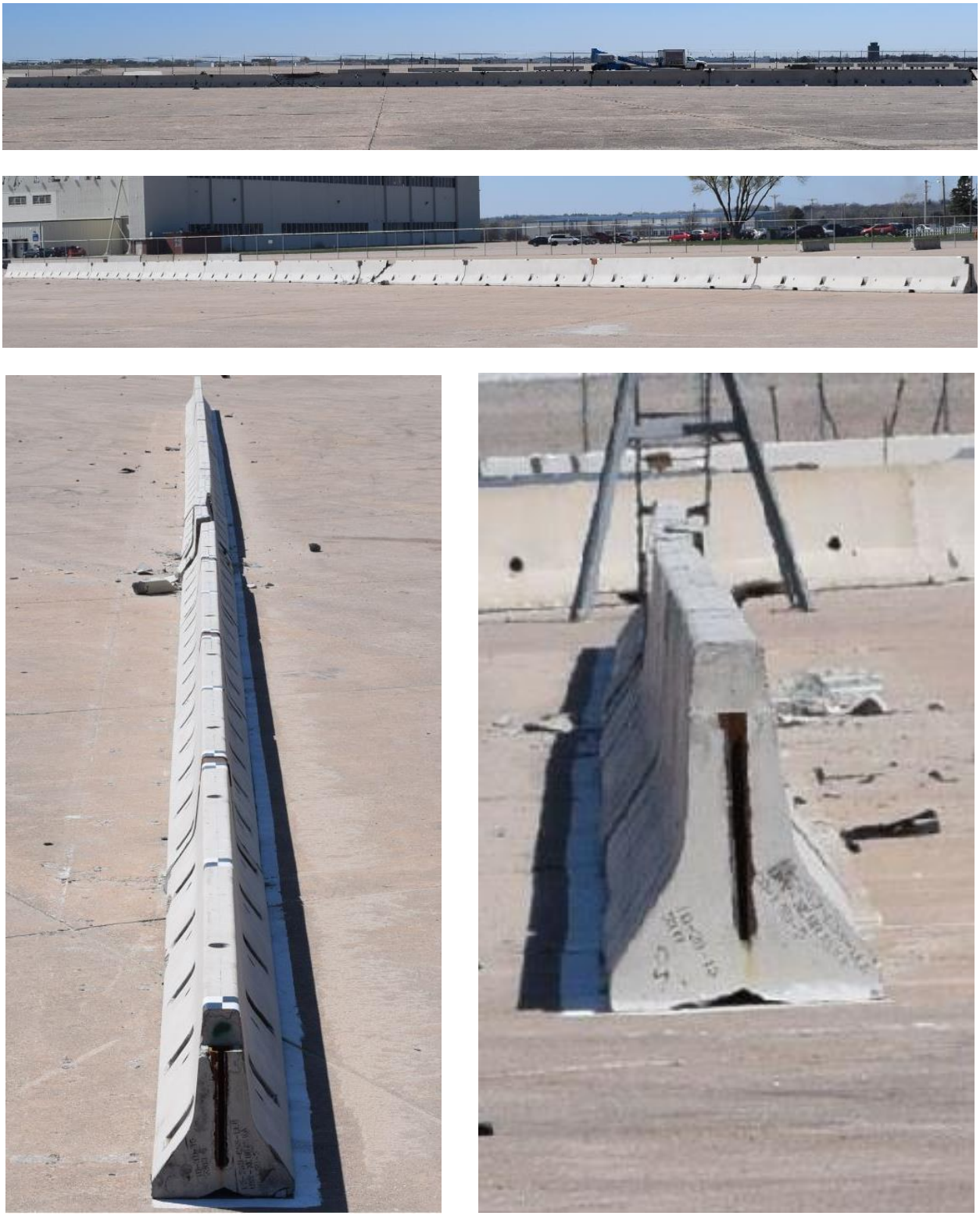

Figure 30. System Damage – Front, Back, Upstream and Downstream End, Test No. NJPCB-2

Figure 31. Barrier Nos. 4 and 5 Damage, Test No. NJPCB-2

Figure 32. Barrier No. 4 Damage, Test No. NJPCB-2

Figure 33. Barrier No. 5 Damage, Test No. NJPCB-2

Figure 34. Barrier No. 5 Damage, Test No. NJPCB-2

Figure 35. Vehicle Damage, Test No. NJPCB-2

Figure 36. Vehicle Damage, Test No. NJPCB-2

Figure 37. Vehicle Damage, Test No. NJPCB-2

Figure 38. Windshield Damage, Test No. NJPCB-2

Figure 39. Occupant Compartment Deformation, Test No. NJPCB-2

Figure 40. Undercarriage Damage, Test No. NJPCB-2

6 SUMMARY AND CONCLUSIONS

Test no. NJPCB-2 was conducted on the NJDOT PCB system with a bolted configuration and grouted toes according to MASH 2009 test designation no. 3-11. This system uses NJDOT barriers, Type 4 (Alternative B) with joint class D, as specified in the 2013 NJDOT *Roadway Design Manual*. All barrier segments were bolted to the concrete tarmac through the anchor pockets with 1-in. (25-mm) diameter, ASTM F1554 Grade 36 threaded rods epoxied into 1⅛-in. (29-mm) diameter pre-drilled holes in the concrete tarmac.

During test no. NJPCB-2, the 4,992-lb (2,264 kg) pickup truck impacted the NJDOT PCB system at a speed of 62.6 mph (100.7 km/h) and at an angle of 24.5 degrees, resulting in an impact severity of 112.6 kip-ft (152.6 kJ). After impacting the barrier system, the vehicle exited the system at a speed of 44.6 mph (71.8 km/h) and at an angle of 9.9 degrees. The vehicle was successfully contained and smoothly redirected with moderate damage to both the barrier and the vehicle. Barrier nos. 4 and 5 were fractured and experienced concrete spalling and cracks. A dynamic deflection of 4.9 in. (125 mm), including tipping at top of the barrier no. 4, and a working width of 24.0 in. (610 mm) were observed during the test, as shown in Figure 23. All occupant risk values were found to be within limits, and the occupant compartment deformations were also deemed acceptable. Subsequently, test no. NJPCB-2 was determined to satisfy the safety performance criteria for MASH 2009 test designation no. 3-11. A summary of the test evaluation is shown in Table 9.

Table 9. Summary of Safety Performance Evaluation

Evaluation Factors	Evaluation Criteria	Test No. NJPCB-2
Structural Adequacy	A. Test article should contain and redirect the vehicle or bring the vehicle to a controlled stop; the vehicle should not penetrate, underride, or override the installation although controlled lateral deflection of the test article is acceptable.	S
Occupant Risk	D. 1. Detached elements, fragments or other debris from the test article should not penetrate or show potential for penetrating the occupant compartment, or present an undue hazard to other traffic, pedestrians, or personnel in a work zone.	S
	2. Deformations of, or intrusions into, the occupant compartment should not exceed limits set forth in Section 5.2.2 and Appendix E of MASH 2016.	S
	F. The vehicle should remain upright during and after collision. The maximum roll and pitch angles are not to exceed 75 degrees.	S
	H. Occupant Impact Velocity (OIV) (see Appendix A, Section A5.3 of MASH 2009 for calculation procedure) should satisfy the following limits:	S

Occupant Impact Velocity Limits		
Component	Preferred	Maximum
Longitudinal and Lateral	30 ft/s (9.1 m/s)	40 ft/s (12.2 m/s)

	I. The Occupant Ridedown Acceleration (ORA) (see Appendix A, Section A5.3 of MASH 2009 for calculation procedure) should satisfy the following limits:	S

Occupant Ridedown Acceleration Limits		
Component	Preferred	Maximum
Longitudinal and Lateral	15.0 g's	20.49 g's

MASH 2009 Test Designation No.	3-11
Final Evaluation (Pass or Fail)	Pass

S – Satisfactory U – Unsatisfactory NA - Not Applicable

7 MASH IMPLEMENTATION

The objective of this research was to evaluate the safety performance of NJDOT's PCB, Type 4 (Alternative B) with a bolted configuration and grouted toes, corresponding to joint class D in the 2013 NJDOT *Roadway Design Manual*. The NJDOT barriers consisted of NJDOT PCBs joined with a connection key. All barriers were anchored to the concrete roadway surface through the ten anchor pockets with 1-in. (25-mm) diameter by 14-in. (356-mm) long, ASTM F1554 Grade 36 threaded rods epoxied into 1⅛-in. (29-mm) diameter holes in the concrete surface. The barrier segments were pulled in a direction parallel to its longitudinal axis, and slack was removed in all joints prior to installation of the steel anchor pins. A wedge of grout was placed at the toe of each joint on both the traffic side and back side of the system.

According to TL-3 evaluation criteria in MASH 2009, two tests are required for evaluation of longitudinal barrier systems: (1) test designation no. 3-10 – an 1100C small car and (2) test designation no. 3-11 – a 2270P pickup truck. However, only the 2270P crash test was deemed necessary as other prior small car tests were used to support a decision to deem the 1100C crash test not critical.

In test no. 7069-3, a rigid, F-shape bridge rail was successfully impacted by a small car weighing 1,800 lb (816 kg) at 60.1 mph (96.7 km/h) and 21.4 degrees according to the American Association of State Highway and Transportation Officials (AASHTO) *Guide Specifications for Bridge Railings* [5-6]. In the same manner, test nos. CMB-5 through CMB-10, CMB-13, and 4798-1 showed that rigid, New Jersey, concrete safety shape barriers struck by small cars have been shown to meet safety performance standards [7-9]. In addition, in test no. 2214NJ-1, a rigid, New Jersey, ½-section, concrete safety shape barrier was impacted by a passenger car 2,579 lb (1,170 kg) at 60.8 mph (97.8 km/h) and 26.1 degrees according to the TL-3 standards set forth in MASH 2009 [9]. Furthermore, temporary, New Jersey safety shape, concrete median barriers have experienced only slight barrier deflections when impacted by small cars and behave similarly to rigid concrete barriers as seen in test no. 47 [10]. Therefore, the 1100C passenger car test was deemed not critical for testing and evaluating this PCB system. It should be noted that any tests within the evaluation matrix deemed not critical may eventually need to be evaluated based on additional knowledge gained over time or additional FHWA eligibility letter requirements.

During test no. NJPCB-2, a 4,992-lb (2,264 kg) pickup truck with a simulated occupant seated in the left-front seat impacted the NJDOT PCB system with joint class D, as specified in the 2013 NJDOT *Roadway Design Manual*, at a speed of 62.6 mph (100.7 km/h) and at an angle of 24.5 degrees, resulting in an impact severity of 112.6 kip-ft (152.6 kJ). At 0.210 sec after impact, the vehicle became parallel to the system with a speed of 45.5 mph (73.3 km/h). At 0.356 sec, the vehicle exited the system at a speed of 44.6 mph (71.8 km/h) and at an angle of 9.9 degrees. The vehicle was successfully contained and smoothly redirected.

Exterior vehicle damage was moderate. Interior occupant compartment deformations were minimal with a maximum of 5⅝ in. (143 mm), which did not violate the limits established in MASH 2009. Damage to the barrier was also moderate, consisting of contact marks on the front face of the PCB segments, concrete spalling, and concrete fracture and cracking on barrier nos. 4 and 5. The maximum dynamic barrier deflection was 4.9 in. (125 mm), which included tipping of the barrier at the top surface. The working width of the PCB system was 24.0 in. (610 mm). All occupant risk measures were within the recommended limits, and the occupant compartment

deformations were also deemed acceptable. Therefore, NJDOT barriers, Type 4 (Alternative B) with joint class D, as specified in the 2013 NJDOT *Roadway Design Manual*, successfully met all the safety performance criteria of MASH 2009 test designation no. 3-11.

The NJDOT barriers, Type 4 (Alternative B) with joint class D, as specified in the 2013 NJDOT *Roadway Design Manual*, consisting of NJDOT PCB barriers joined with a connection key, joint slack removed, grouted toes, and every barrier bolted on both the traffic side and back side, was successfully crash tested and evaluated according to the AASHTO MASH 2009 TL-3 criteria. This barrier successfully met all the requirements of MASH 2009 test designation no. 3-11. In addition, the researchers consider the system MASH 2009 compliant based on the successful test designation no. 3-11 test and the previous justification for test designation no. 3-10 being deemed not critical. Further, since there is no difference between MASH 2009 and MASH 2016 for the evaluation of longitudinal barriers such as the PCB system tested in this project, except for the additional occupant compartment deformation measurements required by MASH 2016, this system also meets MASH 2016 TL-3 criteria.

While no previous comparison between crash tests exists, it is anticipated that little to no benefit would be observed in reduced barrier deflections and clear space requirements due to joint slack removal and/or use of grouted toes. The finding is primarily due to no barrier reinforcement in the toes of the New Jersey PCB segments. The lack of steel reinforcement led to concrete fracture near the barrier toes when they were loaded by adjacent barrier segments, which caused increased rotation of the barrier joints. This concrete toe disengagement reduced the expected benefit that would have been provided by the removal of joint slack and use of grouted toes. Further, the PCB segments used in this test have a relatively small gap between adjacent barrier segments. Thus, improvement of the joint response through removal of joint slack and use of grouted toes provided less benefit than would be expected for other PCB systems, which utilize joint spacings up to 4 in. (102 mm). Finally, barrier system behavior and associated barrier deflections can vary from test to test due to the natural variability of a wide variety of factors involved in full-scale crash testing. These factors would include slight differences in impact conditions, differing test vehicle model years, slight variations in steel and concrete strengths, and variation of the cracking and damage observed on the barrier segments, among others. Thus, some variability would be expected in barrier performance, even for basically identical systems.

In the 2013 NJDOT *Roadway Design Manual* the allowable deflection is determined by the clear space behind the barrier, which is defined as the maximum deflection of the back of the barrier from its original position. For joint class D, as specified in the 2013 NJDOT *Roadway Design Manual* and utilized in this system, the NJDOT allowable movement guidance is 0 in. (0 mm). For this test, the clear space behind the barrier was 0 in. (0 mm).

8 REFERENCES

1. New Jersey Department of Transportation, *Roadway Design Manual*, Revised May 10, 2013.

2. New Jersey Department of Transportation, *Roadway Design Manual*, Revised 2015.

3. *Manual for Assessing Safety Hardware*, American Association of State Highway and Transportation Officials (AASHTO), Washington, D.C., 2009.

4. *Manual for Assessing Safety Hardware, Second Edition*, American Association of State Highway and Transportation Officials (AASHTO), Washington, D.C., 2016.

5. Buth, C. E., Hirsch, T. J., and McDevitt, C. F., *Performance Level 2 Bridge Railings*, Transportation Research Record No. 1258, Transportation Research Board, National Research Council, Washington, D.C., 1990.

6. *Guide Specifications for Bridge Railings*, American Association of State Highway and Transportation Officials (AASHTO), Washington, D.C., 1989

7. Bronstad, M. E., Calcote, L. R., and Kimball Jr, C. E., *Concrete Median Barrier Research-Vol.2 Research Report*, Report No. FHWA-RD-77-4, Submitted to the Office of Research and Development, Federal Highway Administration, Performed by Southwest Research Institute, San Antonio, TX, March 1976.

8. Buth, C. E., Campise, W. L., Griffin III, L. I., Love, M. L., and Sicking, D. L., *Performance Limits of Longitudinal Barrier Systems-Volume I: Summary Report*, FHWA/RD-86/153, Final Report to the Federal Highway Administration, Office of Safety and Traffic Operations R&D, Performed by Texas Transportation Institute, Texas A&M University, College Station, TX, May 1986.

9. Polivka, K.A., Faller, R.K., Sicking, D.L., Rohde, J.R., Bielenberg, B.W., Reid, J.D., and Coon, B.A., *Performance Evaluation of the Permanent New Jersey Safety Shape Barrier – Update to NCHRP 350 Test No. 3-10 (2214NJ-1)*, Report No. TRP-03-177-06, Midwest Roadside Safety Facility, University of Nebraska-Lincoln, Lincoln, Nebraska, October 13, 2006.

10. Fortuniewicz, J. S., Bryden, J. E., and Phillips, R. G., *Crash Tests of Portable Concrete Median Barrier for Maintenance Zones*, Report No. FHWA/NY/RR-82/102, Final Report to the Office of Research, Development, and Technology, Federal Highway Administration, Performed by the Engineering Research and Development Bureau, New York State Department of Transportation, December 1982.

11. Bhakta, S.K., Lechtenberg, K.A., Faller, R.K., Reid, J.D., and Bielenberg, R.W., *Performance Investigation of New Jersey's Portable Concrete Barriers in a Pinned Configuration – Test No. NJPCB-1*, Report No. TRP-03-338-18, Midwest Roadside Safety Facility, University of Nebraska-Lincoln, December 2018.

12. Hinch, J., Yang, T.L., and Owings, R., *Guidance Systems for Vehicle Testing*, ENSCO, Inc., Springfield, Virginia, 1986.

13. *Center of Gravity Test Code - SAE J874 March 1981*, SAE Handbook Vol. 4, Society of Automotive Engineers, Inc., Warrendale, Pennsylvania, 1986.

14. Society of Automotive Engineers (SAE), *Instrumentation for Impact Test – Part 1 – Electronic Instrumentation*, SAE J211/1 MAR95, New York City, NY, July, 2007.

15. *Vehicle Damage Scale for Traffic Investigators*, Second Edition, Technical Bulletin No. 1, Traffic Accident Data (TAD) Project, National Safety Council, Chicago, Illinois, 1971.

16. *Collision Deformation Classification – Recommended Practice J224 March 1980*, Handbook Volume 4, Society of Automotive Engineers (SAE), Warrendale, Pennsylvania, 1985.

17. Power Fasteners, *AC100+ Gold – Vinylester Injection Adhesive Anchoring System*, Obtained from web on May 26, 2016, http://www.powers.com/pdfs/chemical/8486_8490.pdf

18. ACI Committee 318, *Building Code Requirements for Structural Concrete (ACI 318-14) and Commentary*, Farmington Hills, MI, American Concrete Institute, August 2014.

19. ASTM Committee A01. (2014, December), *ASTM A36 - Standard Specification for Carbon Structural Steel*, Obtained from web on May 26, 2016, http://compass.astm.org/download/A36A36M.39854.pdf

9 APPENDICES

Appendix A. NJDOT PCB Standard Plans

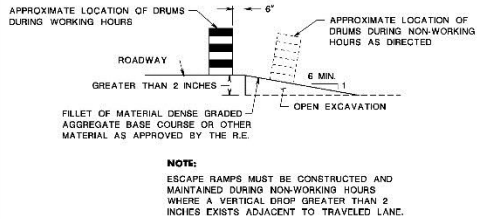

NOTE:

ESCAPE RAMPS MUST BE CONSTRUCTED AND MAINTAINED DURING NON-WORKING HOURS WHERE A VERTICAL DROP GREATER THAN 2 INCHES EXISTS ADJACENT TO TRAVELED LANE.

ESCAPE RAMP DETAIL

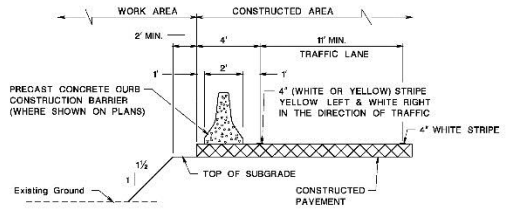

TYPICAL SECTION

PLACEMENT OF PRECAST CONCRETE CONSTRUCTION BARRIER

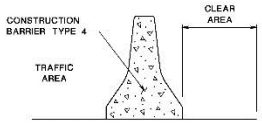

NOTES:

1. CHANGES TO THE PROPOSED JOINT CLASS AT ANY LOCATION MUST BE APPROVED BY THE DEPT.
2. NO ROADWAY DROP OFFS, OBSTRUCTIONS, STORAGE OF MATERIALS OR WORK WILL BE PERMITTED IN THE CLEAR AREA UNLESS APPROVED BY THE R.E.

STAGE	LOCATION	JOINT CLASS
	RTE. STA. TO STA.	

JOINT CLASS	CLEAR AREA
A	20 INCHES
B	16 INCHES
C	11 INCHES

CONSTRUCTION BARRIER, TYPE 4 JOINT CLASS AND CLEAR AREA

REGULATORY APPROACH SPEED OF TRAFFIC MILES/HOUR	RECOMMENDED SIGHT DISTANCE TO BEGINNING OF CHANNELIZING TAPERS		
	DESIRABLE		MINIMUM
	RURAL FEET	URBAN FEET	RURAL AND URBAN FEET
25	375	525	150
30	450	625	200
35	525	725	250
40	600	825	325
45	675	925	400
50	750	1025	475
55	875	1150	550
60	1000	1275	650
65	1050		725

NOTES:

1. AVOIDANCE MANEUVER IS FOR A SPEED, PATH, AND/OR DIRECTION CHANGE PRIOR TO THE BEGINNING OF CHANNELIZING TAPERS.
2. RECOMMENDED DISTANCES BETWEEN TWO SEPARATE LANE CLOSURES SHALL BE DOUBLE THE VALUES SHOWN ABOVE.
3. RURAL AND URBAN ROAD DESIGNATIONS SHALL BE AS DEFINED IN THE NJDOT STATE HIGHWAY STRAIGHT LINE DIAGRAMS.
4. DESIRABLE VALUES SHALL BE PROVIDED WHEREVER POSSIBLE. IF IT IS NOT FEASIBLE OR PRACTICAL TO PROVIDE DESIRABLE VALUES BECAUSE OF HORIZONTAL OR VERTICAL CURVATURE OR IF RELOCATION OF THE TAPER IS NOT POSSIBLE, THEN MINIMUM VALUES CAN BE APPLIED. WHEN MINIMUM VALUES ARE USED, SPECIAL ATTENTION SHOULD BE GIVEN TO THE USE OF SUITABLE TRAFFIC CONTROL DEVICES FOR PROVIDING ADVANCED WARNING OF THE CONDITIONS THAT ARE LIKELY TO BE ENCOUNTERED.
5. TAPERS SHALL BE LOCATED TO MAXIMIZE THE VISIBILITY OF THEIR TOTAL LENGTH.

RECOMMENDED TAPER LENGTH AND SPACING FOR CHANNELIZING TAPERS						RECOMMENDED SPACING ALONG TANGENTS
REGULATORY APPROACH SPEED OF TRAFFIC MILES/HOUR	MINIMUM TAPER RATIO IN LENGTH PER FOOT OF WIDTH	MINIMUM TAPER LENGTH L – FOR LANE WIDTHS 10'	11'	12'	MAXIMUM DEVICE (B) SPACING ALONG TAPERS IN FEET	MAXIMUM DEVICE (D) SPACING ALONG TANGENTS IN FEET
25	10.5:1	105	115	125	25	50
30	15:1	150	165	180	30	60
35	20.5:1	205	225	245	35	70
40	27:1	270	300	325	40	80
45	45:1	450	495	540	45	90
50	50:1	500	550	600	50	100
55	55:1	550	605	660	55	110
60	60:1	600	660	720	60	120
65	65:1	650	715	780	65	130

NOTE:

THE MAXIMUM DEVICE SPACING ALONG CURVES SHALL BE AS DEFINED FOR TAPERS (B) IN THE ABOVE TABLE.

NOTE TO DESIGNER:

THIS SHEET REQUIRES DESIGN SPECIFIC INFORMATION TO BE ADDED AND INCLUDED IN THE CONTRACT PLANS.

REMOVE THIS NOTE AFTER DESIGN SPECIFIC INFORMATION IS ADDED.

N.T.S.

TCD-2

NEW JERSEY DEPARTMENT OF TRANSPORTATION

TRAFFIC CONTROL DETAILS

101/146

Figure A-1. NJDOT PCB Standard Plans

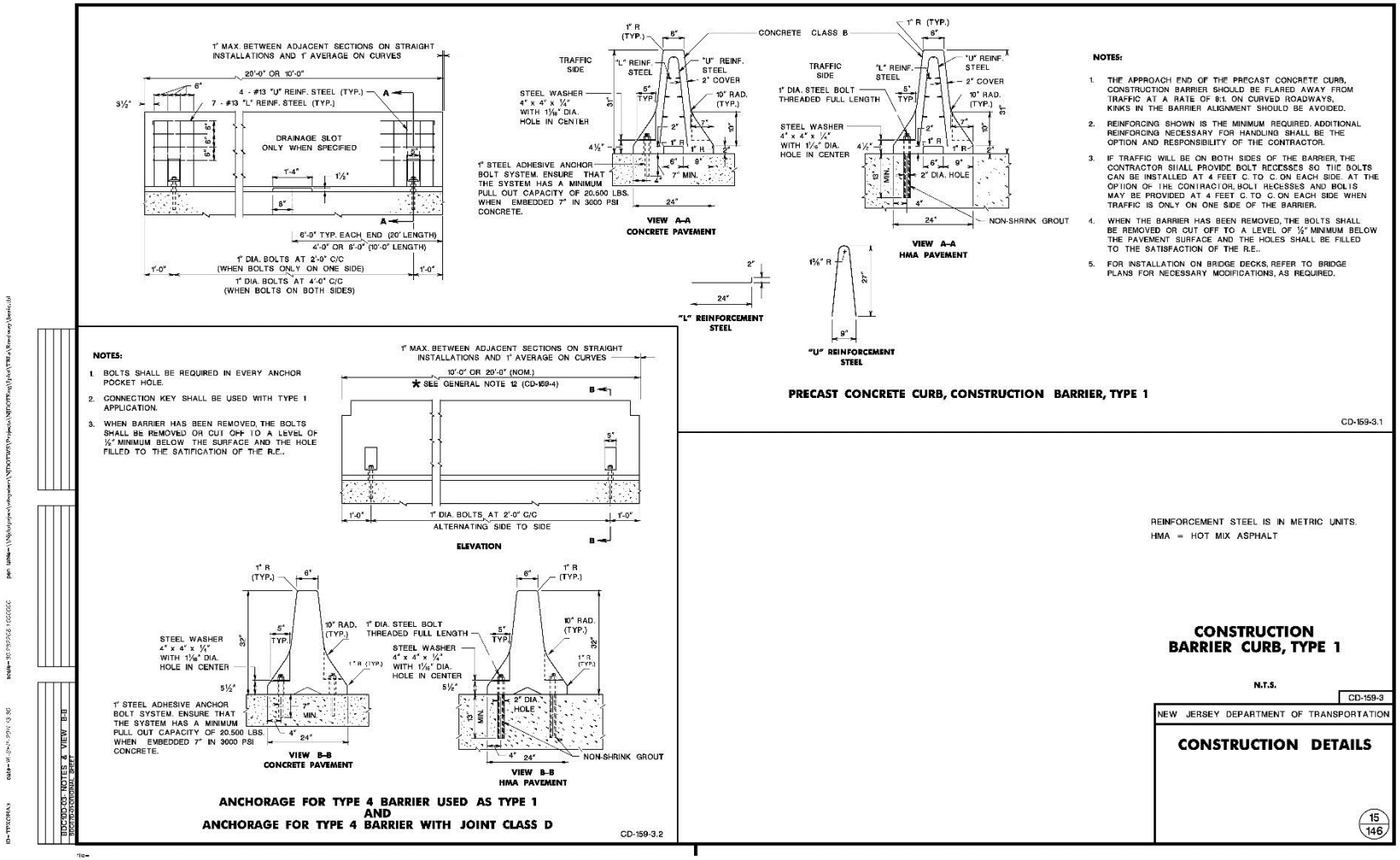

Figure A-2. NJDOT PCB Standard Plans

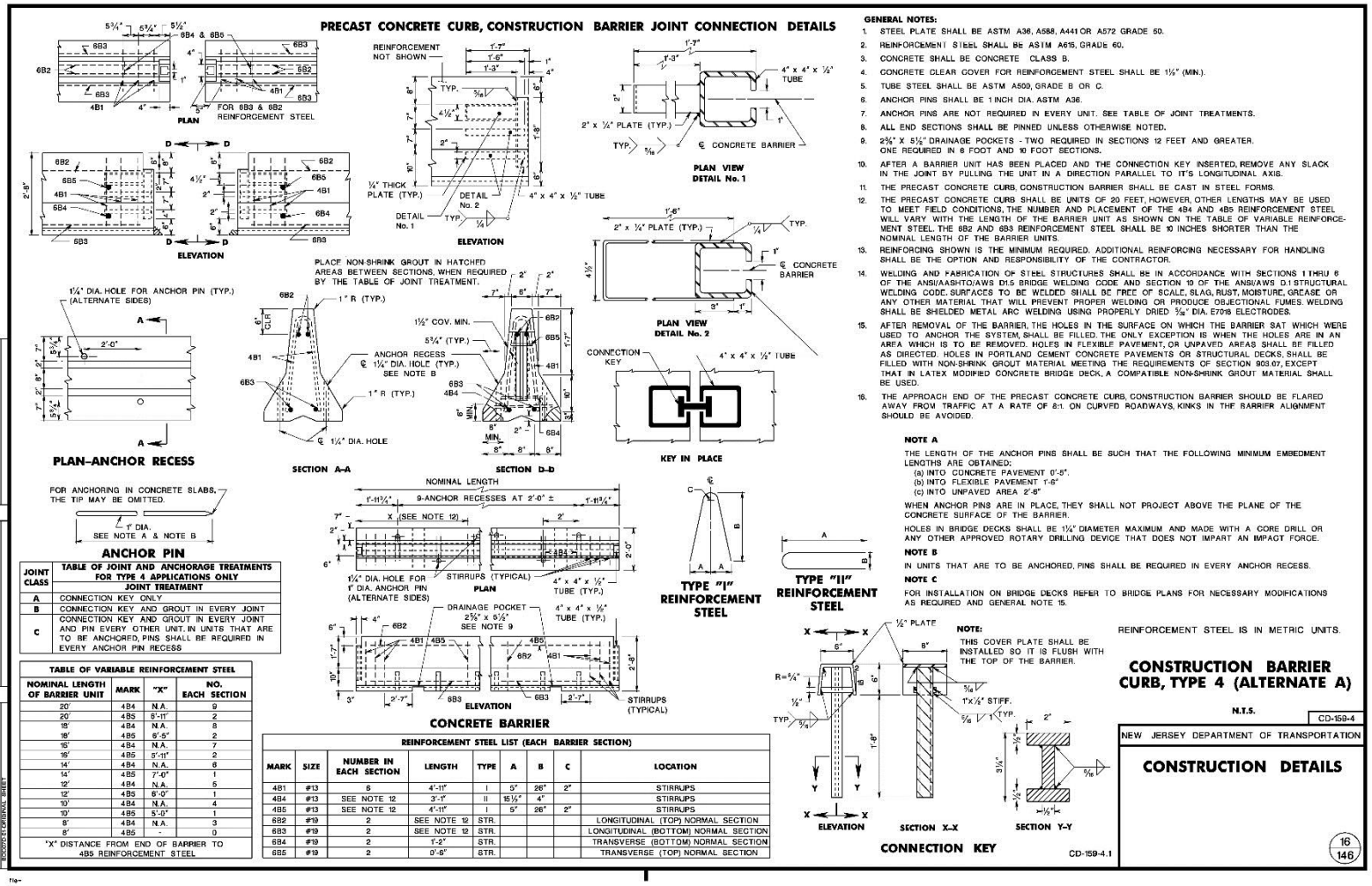

TABLE OF JOINT AND ANCHORAGE TREATMENTS FOR TYPE 4 APPLICATIONS ONLY	
JOINT CLASS	JOINT TREATMENT
A	CONNECTION KEY ONLY
B	CONNECTION KEY AND GROUT IN EVERY JOINT
C	CONNECTION KEY AND GROUT IN EVERY JOINT AND PIN EVERY OTHER UNIT. IN UNITS THAT ARE TO BE ANCHORED, PINS SHALL BE REQUIRED IN EVERY ANCHOR PIN RECESS

TABLE OF VARIABLE REINFORCEMENT STEEL			
NOMINAL LENGTH OF BARRIER UNIT	MARK	"X"	NO. EACH SECTION
20'	4B4	N.A.	9
20'	4B5	5'-11"	2
18'	4B4	N.A.	8
18'	4B5	6'-5"	2
16'	4B4	N.A.	7
16'	4B5	5'-11"	2
14'	4B4	N.A.	6
14'	4B5	7'-0"	1
12'	4B4	N.A.	5
12'	4B5	6'-0"	1
10'	4B4	N.A.	4
10'	4B5	5'-0"	1
8'	4B4	N.A.	3
8'	4B5	-	0
"X" DISTANCE FROM END OF BARRIER TO 4B5 REINFORCEMENT STEEL			

REINFORCEMENT STEEL LIST (EACH BARRIER SECTION)								
MARK	SIZE	NUMBER IN EACH SECTION	LENGTH	TYPE	A	B	C	LOCATION
4B1	#13	6	4'-11"	I	5"	26"	2"	STIRRUPS
4B4	#13	SEE NOTE 12	3'-1"	II	15½"	4"		STIRRUPS
4B5	#13	SEE NOTE 12	4'-11"	I	5"	26"	2"	STIRRUPS
6B2	#19	2	SEE NOTE 12	STR.				LONGITUDINAL (TOP) NORMAL SECTION
6B3	#19	2	SEE NOTE 12	STR.				LONGITUDINAL (BOTTOM) NORMAL SECTION
6B4	#19	2	1'-2"	STR.				TRANSVERSE (BOTTOM) NORMAL SECTION
6B5	#19	2	0'-6"	STR.				TRANSVERSE (TOP) NORMAL SECTION

Figure A-3. NJDOT PCB Standard Plans

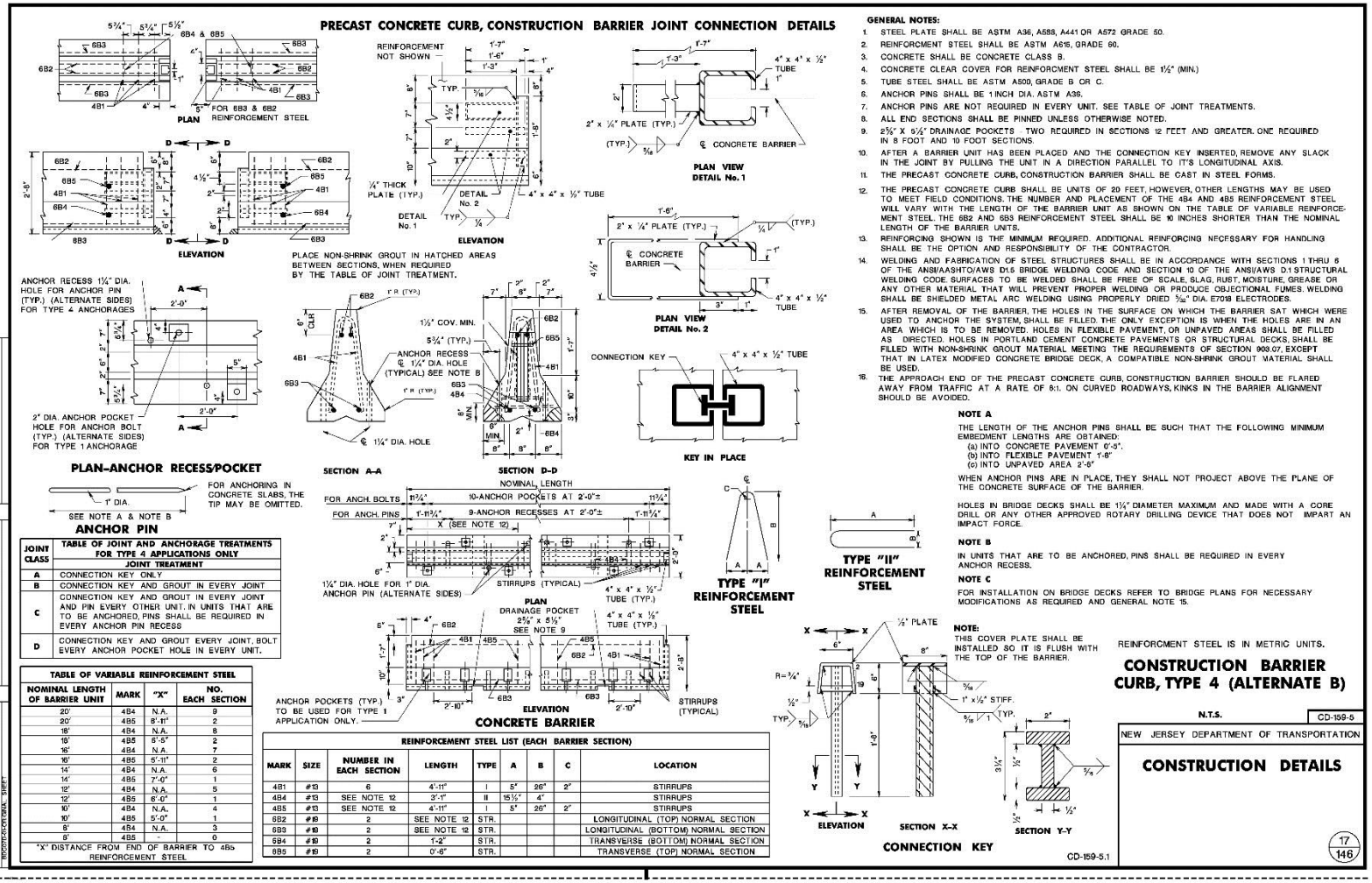

JOINT CLASS	TABLE OF JOINT AND ANCHORAGE TREATMENTS FOR TYPE 4 APPLICATIONS ONLY — JOINT TREATMENT
A	CONNECTION KEY ONLY
B	CONNECTION KEY AND GROUT IN EVERY JOINT
C	CONNECTION KEY AND GROUT IN EVERY JOINT AND PIN EVERY OTHER UNIT. IN UNITS THAT ARE TO BE ANCHORED, PINS SHALL BE REQUIRED IN EVERY ANCHOR PIN RECESS
D	CONNECTION KEY AND GROUT EVERY JOINT, BOLT EVERY ANCHOR POCKET HOLE IN EVERY UNIT.

TABLE OF VARIABLE REINFORCEMENT STEEL

NOMINAL LENGTH OF BARRIER UNIT	MARK	"X"	NO. EACH SECTION
20'	4B4	N.A.	9
20'	4B5	8'-11"	2
18'	4B4	N.A.	8
18'	4B5	6'-5"	2
16'	4B4	N.A.	7
16'	4B5	5'-11"	2
14'	4B4	N.A.	6
14'	4B5	7'-0"	1
12'	4B4	N.A.	5
12'	4B5	6'-0"	1
10'	4B4	N.A.	4
10'	4B5	5'-0"	1
8'	4B4	N.A.	3
8'	4B5	-	0

"X" DISTANCE FROM END OF BARRIER TO 4B5 REINFORCEMENT STEEL

REINFORCEMENT STEEL LIST (EACH BARRIER SECTION)

MARK	SIZE	NUMBER IN EACH SECTION	LENGTH	TYPE	A	B	C	LOCATION
4B1	#13	6	4'-11"	I	5"	26"	2"	STIRRUPS
4B4	#13	SEE NOTE 12	3'-1"	II	15½"	4"		STIRRUPS
4B5	#13	SEE NOTE 12	4'-11"	I	5"	26"	2"	STIRRUPS
6B2	#19	2	SEE NOTE 12	STR.				LONGITUDINAL (TOP) NORMAL SECTION
6B3	#19	2	SEE NOTE 12	STR.				LONGITUDINAL (BOTTOM) NORMAL SECTION
6B4	#19	2	1'-2"	STR.				TRANSVERSE (BOTTOM) NORMAL SECTION
6B5	#19	2	0'-6"	STR.				TRANSVERSE (TOP) NORMAL SECTION

Figure A-4. NJDOT PCB Standard Plans

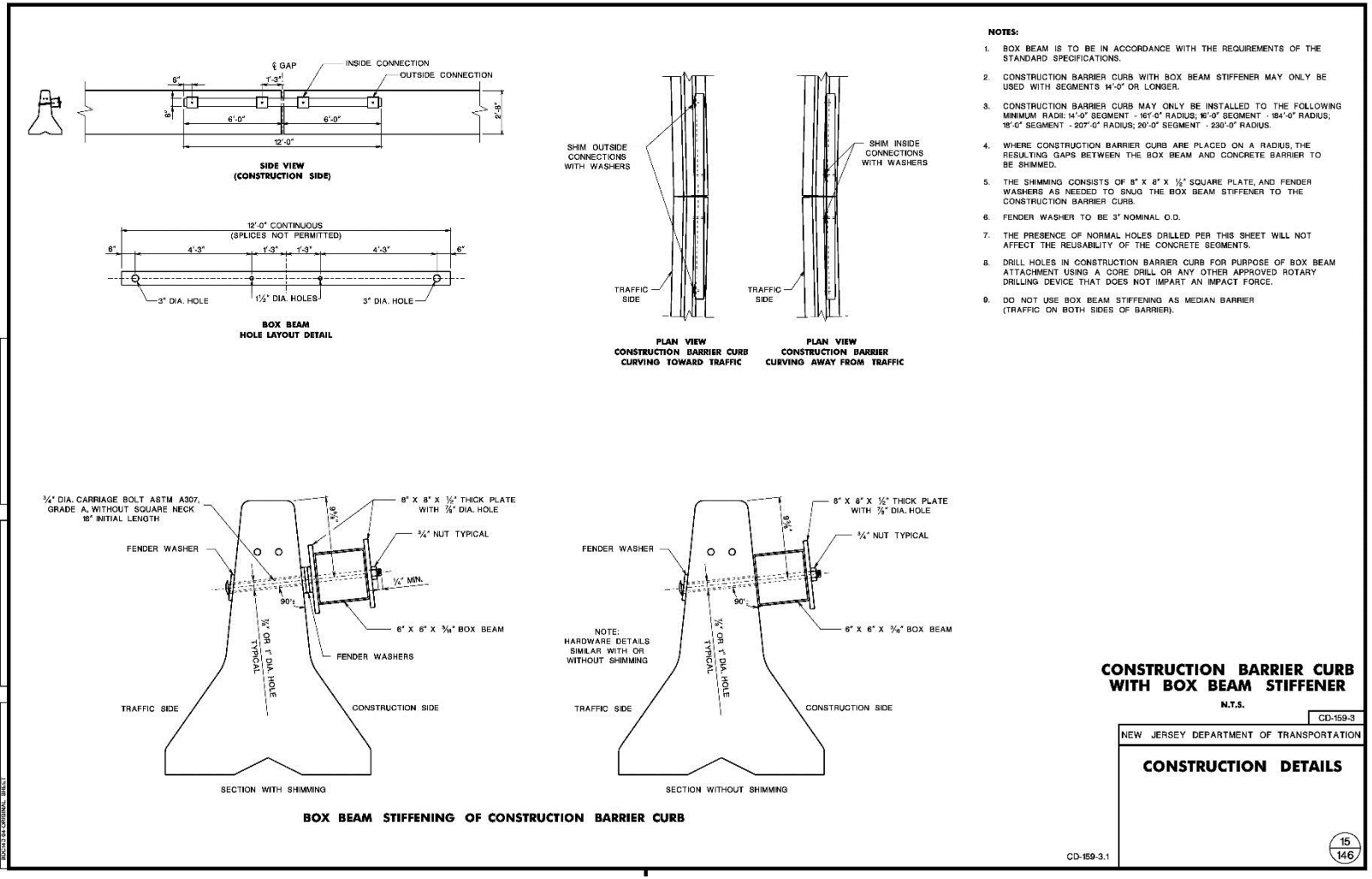

Figure A-5. NJDOT PCB Standard Plans

Appendix B. Material Specifications

Table B-1. Bill of Materials, Test No. NJPCB-2

Item No.	Description	Material Specification	Reference
A1	Concrete Barrier Segment	Min. f 'c = 3,700 psi (25.5 MPa)	University of Nebraska 15-563
B1	Rebar - #4 Vertical Stirrup	ASTM A615 Gr. 60	Heat #61101274, 61101493, 61101510, 61101492, 61101499, 61101772
B2, B3	Rebar - #6 Longitudinal Bar	ASTM A615 Gr. 60	Heat #6115448, 61105472
B4	Rebar - #4 Horizontal Anchor Recess, Reinforcement Stirrup	ASTM A615 Gr. 60	Heat #61101274, 61101493, 61101510, 61101492, 61101499, 61101772
B5	Rebar - #6 Top and Bottom Cross Bar	ASTM A615 Gr. 60	Heat #6115448, 61105472
C1	Steel Tube – 4”×4”×½” (102×102×12.7) thick × 20” (508) long	ASTM A500 Gr. B and C	Heat #821597, 1422428, M04495_1, T83539, SD5020
C2	Bent Steel Plate 1, 2”×¼” (51×6)	ASTM A36	Heat #1129849
C3	Bent Steel Plate 2, 2”×¼” (51×6)	ASTM A36	Heat #1129849
D1	Steel Plate 1, 2”×½” (51×13)	ASTM A36	Heat #L99837
D2	Steel Plate 2, 2¼”×½” (57×13)	ASTM A36	Heat #54144612
D3	½” (13) Steel Plate – Stiffener	ASTM A36	Heat #54144612, L99837
D4	½” (13) Steel Plate – Top Plate	ASTM A36	Heat #54144612, L99837
E1	Non-Shrink Grout	Min. 1-day Compressive Strength 1,000 psi (6.9 MPa)	Advantage Grout ASTM C1107 Product Code: 67435
F1	Threaded Rod – 1” Dia. × 13⅝” long (25×346)	ASTM F1554 Grade 36	Heat #0723104mt3671, #0723104mt3672
F2	1” (25) Dia. UNC Hex Nut	ASTM A563 Grade A	Heat #G420007179, #G15-1438 white paint located at Barrier #1 (3ct)
F3	Steel Square Plate Washer – 4”×4”×¼” (102×102×6) with $1^{1}/_{16}$” (27) ID	ASTM A36	Heat #B514901
G1	Epoxy Resin	Min. pullout capacity of 20,500 lb (91.2 kN) in 7” (178) depth in concrete Epoxy Minimum bond strength 1,461 psi (10.1 MPa)	Powers Epoxy AC100+ Gold Tech Data Sheet is available online

UNIVERSITY OF NEBRASKA

15-563

Cast Date	Age (days)	Cylinder 1	Cylinder 2	Average	Age (days)	Cylinder 1	Cylinder 2	Average	Age (days)	Cylinder 1	Cylinder 2	Average	Air	Slump	Concrete Temp.	Ambient Temp	EMAIL, Mailed, etc
10/26/2015	1	4171	3869	4020	7	7805	7800	7803	28			0	5.5	6 3/4	60	58	
10/27/2015	1	3539	3883	3711	7	7343	7624	7484	28			0	6.8	5 3/4	62	60	
10/28/2015	1	4116	4311	4214	7	6223	6340	6282	28			0	6.0	6 1/2	64	64	
10/29/2015	1	3831	3544	3688	7	7046	6998	7022	28			0	5.8	6 1/2	67	68	
10/30/2015	3	4571	4608	4590	7	6337	6235	6286	28			0	6.0	6 1/2	64	63	
11/2/2015	1	3125	3062	3094	7	6887	6748	6818	28			0	6.2	5 3/4	64	62	
	1			0	7			0	28			0					
	1			0	7			0	28			0					
	1			0	7			0	28			0					
	1			0	7			0	28			0					
	1			0	7			0	28			0					
	1			0	7			0	28			0					
	1			0	7			0	28			0					
	1			0	7			0	28			0					
	1			0	7			0	28			0					
	1			0	7			0	28			0					
	1			0	7			0	28			0					
	1			0	7			0	28			0					
	1			0	7			0	28			0					
	1			0	7			0	28			0					
	1			0	7			0	28			0					
	1			0	7			0	28			0					
	1			0	7			0	28			0					
	1			0	7			0	28			0					
	1			0	7			0	28			0					
	1			0	7			0	28			0					
	1			0	7			0	28			0					
	1			0	7			0	28			0					
	1			0	7			0	28			0					
	1			0	7			0	28			0					
	1			0	7			0	28			0					
	1			0	7			0	28			0					
	1			0	7			0	28			0					
	1			0	7			0	28			0					
	1			0	7			0	28			0					
	1			0	7			0	28			0					
	1			0	7			0	28			0					

Figure B-2. Concrete Barrier Segment – Concrete Strength, Test No. NJPCB-2

GERDAU

US-ML-SAYREVILLE
NORTH CROSSMAN ROAD
SAYREVILLE, NJ 08872
USA

CERTIFIED MATERIAL TEST REPORT

Page 1/1

CUSTOMER SHIP TO	CUSTOMER BILL TO	GRADE	SHAPE / SIZE
RB STEEL SUPPLY CO INC 2000 EDDYSTONE INDUSTRIAL PARK EDDYSTONE,PA 19022 USA	RB STEEL SUPPLY CO INC 2000 EDDYSTONE INDUSTRIAL PARK EDDYSTONE,PA 19022-1588 USA	60 (420)	Rebar / #4 (13MM)

LENGTH	WEIGHT	HEAT / BATCH
40'00"	5,050 LB	61101274/02

SALES ORDER	CUSTOMER MATERIAL N°	SPECIFICATION / DATE or REVISION
1785955/000010		ASTM A615/A615M-14

CUSTOMER PURCHASE ORDER NUMBER	BILL OF LADING	DATE
BB 22777	1331-0000029243	01/23/2015

CHEMICAL COMPOSITION

C %	Mn %	P %	S %	Si %	Cu %	Ni %	Cr %	Mo %	Sn %	V %	CEqvA706 %
0.43	0.66	0.012	0.048	0.23	0.43	0.16	0.05	0.046	0.019	0.017	0.56

MECHANICAL PROPERTIES

YS PSI	YS MPa	UTS PSI	UTS MPa	G/L Inch	G/L mm
66850	461	93950	648	8.000	200.0
67400	465	95100	656	8.000	200.0

MECHANICAL PROPERTIES

Elong. %	BendTest
13.50	OK
13.50	OK

GEOMETRIC CHARACTERISTICS

%Light %	Def Hgt Inch	Def Gap Inch	DefSpace Inch
4.10	0.030	0.099	0.320
3.20	0.030	0.099	0.320

COMMENTS / NOTES

This grade meets the requirements for the following grades:

The above figures are certified chemical and physical test records as contained in the permanent records of company. We certify that these data are correct and in compliance with specified requirements. This material, including the billets, was melted and manufactured in the USA. CMTR complies with EN 10204 3.1.

BHASKAR YALAMANCHILI
QUALITY DIRECTOR

JOSEPH T HOMIC
QUALITY ASSURANCE MGR.

Figure B-3. Rebar No. 4 Material Certificate, Test No. NJPCB-2

GERDAU

US-ML-SAYREVILLE
NORTH CROSSMAN ROAD
SAYREVILLE, NJ 08872
USA

CERTIFIED MATERIAL TEST REPORT

Page 1/1

CUSTOMER SHIP TO	CUSTOMER BILL TO	GRADE	SHAPE / SIZE
RE STEEL SUPPLY CO INC 2000 EDDYSTONE INDUSTRIAL PARK EDDYSTONE,PA 19022 USA	RE STEEL SUPPLY CO INC 2000 EDDYSTONE INDUSTRIAL PARK EDDYSTONE,PA 19022-1588 USA	60 (420)	Rebar / #4 (13MM)

LENGTH	WEIGHT	HEAT / BATCH
40'00"	5,023 LB	61101493/04

SALES ORDER	CUSTOMER MATERIAL N°	SPECIFICATION / DATE or REVISION
1785955/000010		ASTM A615/A615M-14

CUSTOMER PURCHASE ORDER NUMBER	BILL OF LADING	DATE
BB 22777	1331-0000029243	01/23/2015

CHEMICAL COMPOSITION

C %	Mn %	P %	S %	Si %	Cu %	Ni %	Cr %	Mo %	Sn %	V %	CEqvA706 %
0.42	0.65	0.012	0.058	0.19	0.43	0.15	0.09	0.056	0.020	0.009	0.56

MECHANICAL PROPERTIES

YS PSI	YS MPa	UTS PSI	UTS MPa	G/L Inch	G/L mm
71350	492	104900	723	8.000	200.0
71250	491	105600	728	8.000	200.0

MECHANICAL PROPERTIES

Elong. %	BendTest
13.00	OK
11.50	OK

GEOMETRIC CHARACTERISTICS

%Light %	Def Hgt Inch	Def Gap Inch	DefSpace Inch
2.70	0.032	0.098	0.321
1.40	0.034	0.099	0.321

COMMENTS / NOTES

This grade meets the requirements for the following grades:

The above figures are certified chemical and physical test records as contained in the permanent records of company. We certify that these data are correct and in compliance with specified requirements. This material, including the billets, was melted and manufactured in the USA. CMTR complies with EN 10204 3.1.

BHASKAR YALAMANCHILI
QUALITY DIRECTOR

JOSEPH T HOMOC
QUALITY ASSURANCE MGR.

Figure B-4. Rebar No. 4 Material Certificate, Test No. NJPCB-2

GERDAU

US-ML-SAYREVILLE
NORTH CROSSMAN ROAD
SAYREVILLE, NJ 08872
USA

CERTIFIED MATERIAL TEST REPORT

Page 1/1

CUSTOMER SHIP TO	CUSTOMER BILL TO	GRADE	SHAPE / SIZE
RE STEEL SUPPLY CO INC 2000 EDDYSTONE INDUSTRIAL PARK EDDYSTONE,PA 19022 USA	RE STEEL SUPPLY CO INC 2000 EDDYSTONE INDUSTRIAL PARK EDDYSTONE,PA 19022-1588 USA	60 (420)	Rebar / #4 (13MM)

LENGTH	WEIGHT	HEAT / BATCH
40'00"	5,050 LB	61101510/03

SALES ORDER	CUSTOMER MATERIAL N°	SPECIFICATION / DATE or REVISION
1785955/000010		ASTM A615/A615M-14

CUSTOMER PURCHASE ORDER NUMBER	BILL OF LADING	DATE
BB 22777	1331-0000029243	01/23/2015

CHEMICAL COMPOSITION

C %	Mn %	P %	S %	Si %	Cu %	Ni %	Cr %	Mo %	Sn %	V %	CEqvA706 %
0.42	0.66	0.018	0.046	0.21	0.30	0.11	0.06	0.035	0.018	0.015	0.55

MECHANICAL PROPERTIES

YS PSI	YS MPa	UTS PSI	UTS MPa	G/L Inch	G/L mm
73400	506	107150	739	8.000	200.0
75600	521	110500	762	8.000	200.0

MECHANICAL PROPERTIES

Elong. %	BendTest
12.00	OK
13.00	OK

GEOMETRIC CHARACTERISTICS

%Lugs %	Def Hgt Inch	Def Gap Inch	DefSpace Inch
2.40	0.032	0.080	0.322
2.30	0.032	0.080	0.322

COMMENTS / NOTES

This grade meets the requirements for the following grades:

The above figures are certified chemical and physical test records as contained in the permanent records of company. We certify that these data are correct and in compliance with specified requirements. This material, including the billets, was melted and manufactured in the USA. CMTR complies with EN 10204 3.1.

BHASKAR YALAMANCHILI
QUALITY DIRECTOR

JOSEPH T HOMIC
QUALITY ASSURANCE MGR.

Figure B-5. Rebar No. 4 Material Certificate, Test No. NJPCB-2

GERDAU

US-ML-SAYREVILLE
NORTH CROSSMAN ROAD
SAYREVILLE, NJ 08872
USA

CERTIFIED MATERIAL TEST REPORT

Page 1/1

CUSTOMER SHIP TO	CUSTOMER BILL TO	GRADE	SHAPE / SIZE
RE STEEL SUPPLY CO INC 2000 EDDYSTONE INDUSTRIAL PARK EDDYSTONE,PA 19022 USA	RE STEEL SUPPLY CO INC 2000 EDDYSTONE INDUSTRIAL PARK EDDYSTONE,PA 19022-1588 USA	60 (420)	Rebar / #4 (13MM)

LENGTH	WEIGHT	HEAT / BATCH
40'00"	10,020 LB	61101492/02

SALES ORDER	CUSTOMER MATERIAL N°	SPECIFICATION / DATE or REVISION
1785955/000010		ASTM A615/A615M-14

CUSTOMER PURCHASE ORDER NUMBER	BILL OF LADING	DATE
BB 22777	1331-0000029243	01/23/2015

CHEMICAL COMPOSITION

C %	Mn %	P %	S %	Si %	Cu %	Ni %	Cr %	Mo %	Sn %	V %	CEqvA706 %
0.43	0.67	0.014	0.054	0.20	0.43	0.21	0.10	0.064	0.018	0.017	0.57

MECHANICAL PROPERTIES

YS PSI	YS MPa	UTS PSI	UTS MPa	G/L inch	G/L mm
65150	449	96100	663	8.000	200.0
68450	472	99600	687	8.000	200.0

MECHANICAL PROPERTIES

Elong. %	BendTest
15.00	OK
15.50	OK

GEOMETRIC CHARACTERISTICS

%Light %	Def Hgt Inch	Def Gap Inch	DefSpace Inch
3.60	0.031	0.078	0.322
1.70	0.029	0.090	0.322

COMMENTS / NOTES

This grade meets the requirements for the following grades:

The above figures are certified chemical and physical test records as contained in the permanent records of company. We certify that these data are correct and in compliance with specified requirements. This material, including the billets, was melted and manufactured in the USA. CMTR complies with EN 10204 3.1.

BHASKAR YALAMANCHILI
QUALITY DIRECTOR

JOSEPH T HOMIC
QUALITY ASSURANCE MGR.

Figure B-6. Rebar No. 4 Material Certificate, Test No. NJPCB-2

GERDAU

US-ML-SAYREVILLE
NORTH CROSSMAN ROAD
SAYREVILLE, NJ 08872
USA

CERTIFIED MATERIAL TEST REPORT

Page 1/1

CUSTOMER SHIP TO	CUSTOMER BILL TO	GRADE	SHAPE / SIZE
RE STEEL SUPPLY CO INC 2000 EDDYSTONE INDUSTRIAL PARK EDDYSTONE,PA 19022 USA	RE STEEL SUPPLY CO INC 2000 EDDYSTONE INDUSTRIAL PARK EDDYSTONE,PA 19022-1588 USA	60 (420)	Rebar / #4 (33MM)

LENGTH	WEIGHT	HEAT / BATCH
40'00"	5,050 LB	61101499/04

SALES ORDER	CUSTOMER MATERIAL N°	SPECIFICATION / DATE or REVISION
1785955/000010		ASTM A615/A615M-14

CUSTOMER PURCHASE ORDER NUMBER	BILL OF LADING	DATE
BB 22777	1331-0000029243	01/23/2015

CHEMICAL COMPOSITION

C %	Mn %	P %	S %	Si %	Cu %	Ni %	Cr %	Mo %	Sn %	V %	CEqvA706 %
0.43	0.68	0.026	0.064	0.21	0.33	0.21	0.19	0.066	0.016	0.012	0.58

MECHANICAL PROPERTIES

YS PSI	YS MPa	UTS PSI	UTS MPa	G/L Inch	G/L mm
70900	489	105500	727	8.000	200.0
68950	475	103200	712	8.000	200.0

MECHANICAL PROPERTIES

Elong. %	BendTest
11.00	OK
11.00	OK

GEOMETRIC CHARACTERISTICS

¾Lgbx %	Def Hgt Inch	Def Gap Inch	DefSpace Inch
1.90	0.032	0.088	0.321
1.90	0.032	0.086	0.321

COMMENTS / NOTES

This grade meets the requirements for the following grades:

The above figures are certified chemical and physical test records as contained in the permanent records of company. We certify that these data are correct and in compliance with specified requirements. This material, including the billets, was melted and manufactured in the USA. CMTR complies with EN 10204 3.1.

BHASKAR YALAMANCHILI
QUALITY DIRECTOR

JOSEPH T HOMIC
QUALITY ASSURANCE MGR.

Figure B-7. Rebar No. 4 Material Certificate, Test No. NJPCB-2

GERDAU

US-ML-SAYREVILLE
NORTH CROSSMAN ROAD
SAYREVILLE, NJ 08872
USA

CERTIFIED MATERIAL TEST REPORT

Page 1/1

CUSTOMER SHIP TO	CUSTOMER BILL TO	GRADE	SHAPE / SIZE
RE STEEL SUPPLY CO INC 2000 EDDYSTONE INDUSTRIAL PARK EDDYSTONE,PA 19022 USA	RE STEEL SUPPLY CO INC 2000 EDDYSTONE INDUSTRIAL PARK EDDYSTONE,PA 19022-1588 USA	60 (420)	Rebar / #4 (13MM)

LENGTH	WEIGHT	HEAT / BATCH
40'00"	4,008 LB	61101772/04

SALES ORDER	CUSTOMER MATERIAL N°	SPECIFICATION / DATE or REVISION
1785955/000010		ASTM A615/A615M-14

CUSTOMER PURCHASE ORDER NUMBER	BILL OF LADING	DATE
BB 22777	1331-0000029243	01/23/2015

CHEMICAL COMPOSITION

C %	Mn %	P %	S %	Si %	Cu %	Ni %	Cr %	Mo %	Sn %	V %	CEqvA706 %
0.44	0.67	0.019	0.059	0.20	0.38	0.16	0.06	0.047	0.017	0.016	0.57

MECHANICAL PROPERTIES

YS PSI	YS MPa	UTS PSI	UTS MPa	G/L Inch	G/L mm
66400	458	96900	668	8.000	200.0
65850	454	97700	674	8.000	200.0

MECHANICAL PROPERTIES

Elong. %	BendTest
16.00	OK
17.00	OK

GEOMETRIC CHARACTERISTICS

%Light %	Def Hgt Inch	Def Gap Inch	DefSpace Inch
1.10	0.025	0.099	0.320
0.80	0.029	0.115	0.320

COMMENTS / NOTES

This grade meets the requirements for the following grades:

The above figures are certified chemical and physical test records as contained in the permanent records of company. We certify that these data are correct and in compliance with specified requirements. This material, including the billets, was melted and manufactured in the USA. CMTR complies with EN 10204 3.1.

BHASKAR YALAMANCHILI
QUALITY DIRECTOR

JOSEPH T HOMIC
QUALITY ASSURANCE MGR.

Figure B-8. Rebar No. 4 Material Certificate, Test No. NJPCB-2

GERDAU

US-ML-SAYREVILLE
NORTH CROSSMAN ROAD
SAYREVILLE, NJ 08872
USA

CERTIFIED MATERIAL TEST REPORT

Page 1/1

CUSTOMER SHIP TO	CUSTOMER BILL TO	GRADE	SHAPE / SIZE
RE STEEL SUPPLY CO INC 2000 EDDYSTONE INDUSTRIAL PARK EDDYSTONE,PA 19022 USA	RE STEEL SUPPLY CO INC 2000 EDDYSTONE INDUSTRIAL PARK EDDYSTONE,PA 19022-1588 USA	60 (420)	Rebar / #6 (19MM)

LENGTH	WEIGHT	HEAT / BATCH
40'00"	30.282 LB	**61105448**/03

SALES ORDER	CUSTOMER MATERIAL N°	SPECIFICATION / DATE or REVISION
2886827/000020		ASTM A615/A615M-15

CUSTOMER PURCHASE ORDER NUMBER	BILL OF LADING	DATE
BB-23635	1331-0000038904	10/08/2015

CHEMICAL COMPOSITION

C %	Mn %	P %	S %	Si %	Cu %	Ni %	Cr %	Mo %	Sn %	V %	CEqvA706 %
0.48	0.75	0.010	0.064	0.23	0.33	0.18	0.09	0.036	0.028	0.018	0.65

MECHANICAL PROPERTIES

YS PSI	YS MPa	UTS PSI	UTS MPa	G/L Inch	G/L mm
70159	484	107318	740	8.000	200.0
70590	487	108364	747	8.000	200.0

MECHANICAL PROPERTIES

Elong. %	BendTest
14.00	OK
13.00	OK

GEOMETRIC CHARACTERISTICS

%Light %	Def Hgt Inch	Def Gap Inch	DefSpace Inch
5.80	0.040	0.090	0.477
5.80	0.040	0.090	0.477

COMMENTS / NOTES

The above figures are certified chemical and physical test records as contained in the permanent records of company. We certify that these data are correct and in compliance with specified requirements. This material, including the billets, was melted and manufactured in the USA. CMTR complies with EN 10204 3.1.

BHASKAR YALAMANCHILI
QUALITY DIRECTOR

JOSEPH T HOMIC
QUALITY ASSURANCE MGR.

Figure B-9. Rebar No. 6 Material Certificate, Test No. NJPCB-2

GERDAU

US-ML-SAYREVILLE
NORTH CROSSMAN ROAD
SAYREVILLE, NJ 08872
USA

CERTIFIED MATERIAL TEST REPORT

Page 1/1

CUSTOMER SHIP TO	CUSTOMER BILL TO	GRADE	SHAPE / SIZE
RE STEEL SUPPLY CO INC 2000 EDDYSTONE INDUSTRIAL PARK EDDYSTONE,PA 19022 USA	RE STEEL SUPPLY CO INC 2000 EDDYSTONE INDUSTRIAL PARK EDDYSTONE,PA 19022-1588 USA	60 (420)	Rebar / #6 (19MM)

LENGTH	WEIGHT	HEAT / BATCH
40'00"	4,987 LB	**61105472**/03

SALES ORDER	CUSTOMER MATERIAL Nº	SPECIFICATION / DATE or REVISION
2886827/000020		ASTM A615/A615M-15

CUSTOMER PURCHASE ORDER NUMBER	BILL OF LADING	DATE
BB-23635	1331-0000038904	10/08/2015

CHEMICAL COMPOSITION

C %	Mn %	P %	S %	Si %	Cu %	Ni %	Cr %	Mo %	Sn %	V %	CEqvA706 %
0.46	0.72	0.019	0.048	0.21	0.38	0.15	0.14	0.036	0.017	0.022	0.63

MECHANICAL PROPERTIES

YS PSI	YS MPa	UTS PSI	UTS MPa	G/L Inch	G/L mm
73296	505	106977	738	8.000	200.0
73386	506	107455	741	8.000	200.0

MECHANICAL PROPERTIES

Elong. %	BendTest
13.00	OK
15.00	OK

GEOMETRIC CHARACTERISTICS

%Light %	Def Hgt Inch	Def Gap Inch	DefSpace Inch
4.20	0.058	0.072	0.481
4.50	0.058	0.072	0.481

COMMENTS / NOTES

The above figures are certified chemical and physical test records as contained in the permanent records of company. We certify that these data are correct and in compliance with specified requirements. This material, including the billets, was melted and manufactured in the USA. CMTR complies with EN 10204 3.1.

BHASKAR YALAMANCHILI
QUALITY DIRECTOR

JOSEPH T HOMIC
QUALITY ASSURANCE MGR.

Figure B-10. Rebar No. 6 Material Certificate, Test No. NJPCB-2

Customer Name	Customer PO#	Shipper No	Heat Number
Seibel Modern Mfg.	Leon	273924	821597

Atlas Tube Canada ULC
200 Clark St.
Harrow, Ontario, Canada
N0R 1G0
Tel: 519-738-3541
Fax: 519-738-3537

Atlas Tube
JMC STEEL GROUP

Ref.B/L: 80664351
Date: 05.08.2015
Customer: 1497

MATERIAL TEST REPORT

Sold to
Triad Metals International
1 Village Road
HORSHAM PA 19044-3812
USA

Shipped to
Triad Metals International
3507 Grand Avenue
PITTSBURGH PA 15225
USA

Material: 3.0x3.0x125x24'0"0(7x7). Material No: 300301252400 Made in: Canada
Sales order: 989576 Purchase Order: 75461 Melted in: Canada

Heat No	C	Mn	P	S	Si	Al	Cu	Cb	Mo	Ni	Cr	V	Ti	B	N
821195	0.190	0.810	0.009	0.007	0.019	0.044	0.060	0.006	0.006	0.026	0.045	0.002	0.002	0.000	0.003

Bundle No	PCs	Yield	Tensile	Eln.2in	Certification
M101451859	49	063780 Psi	077160 Psi	26.6 %	ASTM A500-13 GRADE B&C

CE: 0.34

Material Note:
Sales Or.Note:

Material: 4.0x4.0x500x40'0"0(4x2). Material No: 400405004000 Made in: Canada
Sales order: 995107 Purchase Order: 76312 Melted in: Canada

Heat No	C	Mn	P	S	Si	Al	Cu	Cb	Mo	Ni	Cr	V	Ti	B	N
775533	0.200	0.810	0.012	0.010	0.015	0.031	0.032	0.006	0.002	0.011	0.032	0.002	0.002	0.000	0.003

Bundle No	PCs	Yield	Tensile	Eln.2in	Certification
M101454130	1	066980 Psi	075080 Psi	27.0 %	ASTM A500-13 GRADE B&C

CE: 0.35

Material Note:
Sales Or.Note:

Material: 4.0x4.0x500x40'0"0(4x2). Material No: 400405004000 Made in: Canada
Sales order: 995107 Purchase Order: 76312 Melted in: Canada

Heat No	C	Mn	P	S	Si	Al	Cu	Cb	Mo	Ni	Cr	V	Ti	B	N
821597	0.210	0.780	0.011	0.009	0.013	0.040	0.026	0.006	0.004	0.013	0.031	0.002	0.002	0.000	0.004

Bundle No	PCs	Yield	Tensile	Eln.2in	Certification
M101454130	7	069700 Psi	078390 Psi	27.2 %	ASTM A500-13 GRADE B&C

CE: 0.35

Material Note:
Sales Or.Note:

Marvin Phillips

Authorized by Quality Assurance:
The results reported on this report represent the actual attributes of the material furnished and indicate full compliance with all applicable specification and contract requirements.
CE calculated using the AWS D1.1 method.

Steel Tube Institute OF NORTH AMERICA

Page : 1 Of 4

Metals Service Center Institute

Figure B-11. Steel Tube Material Certificate, Test No. NJPCB-2

Customer Name	Customer PO#	Shipper No	Heat Number
Seibel Modern Mfg.	Leon	273924	821597

Atlas Tube Canada ULC
200 Clark St.
Harrow, Ontario, Canada
N0R 1G0
Tel: 519-738-3541
Fax: 519-738-3537

Atlas Tube
JMC STEEL GROUP

Ref.B/L: 80664351
Date: 05.08.2015
Customer: 1497

MATERIAL TEST REPORT

Sold to
Triad Metals International
1 Village Road
HORSHAM PA 19044-3812
USA

Shipped to
Triad Metals International
3507 Grand Avenue
PITTSBURGH PA 15225
USA

Material: 4.0x4.0x500x40'0"0(4x2). Material No: 400405004000 Made in: Canada
Melted in: Canada
Sales order: 995107 Purchase Order: 76312

Heat No	C	Mn	P	S	Si	Al	Cu	Cb	Mo	Ni	Cr	V	Ti	B	N
821597	0.210	0.780	0.011	0.009	0.013	0.040	0.026	0.006	0.004	0.013	0.031	0.002	0.002	0.000	0.004

Bundle No	PCs	Yield	Tensile	Eln.2in	Certification	CE:
M101454131	8	069700 Psi	078390 Psi	27.2 %	ASTM A500-13 GRADE B&C	0.35

Material Note:
Sales Or.Note:

Material: 6.0x2.0x188x24'0"0(3x9). Material No: 600201882400 Made in: Canada
Melted in: Canada
Sales order: 995107 Purchase Order: 76312

Heat No	C	Mn	P	S	Si	Al	Cu	Cb	Mo	Ni	Cr	V	Ti	B	N
821679	0.180	0.790	0.010	0.008	0.015	0.040	0.047	0.002	0.005	0.023	0.038	0.002	0.002	0.000	0.004

Bundle No	PCs	Yield	Tensile	Eln.2in	Certification	CE:
M101453723	27	058410 Psi	069080 Psi	33.3 %	ASTM A500-13 GRADE B&C	0.33

Material Note:
Sales Or.Note:

Material: 6.0x6.0x188x40'0"0(3x3). Material No: 600601884000 Made in: Canada
Melted in: Canada
Sales order: 1001173 Purchase Order: 77498

Heat No	C	Mn	P	S	Si	Al	Cu	Cb	Mo	Ni	Cr	V	Ti	B	N
821531	0.190	0.810	0.013	0.006	0.017	0.059	0.051	0.005	0.004	0.015	0.036	0.002	0.002	0.000	0.004

Bundle No	PCs	Yield	Tensile	Eln.2in	Certification	CE:
M101456164	9	063160 Psi	078380 Psi	30.5 %	ASTM A500-13 GRADE B&C	0.34

Material Note:
Sales Or.Note:

Authorized by Quality Assurance:
The results reported on this report represent the actual attributes of the material furnished and indicate full compliance with all applicable specification and contract requirements.
Carbon calculated using the AWS D1.1 method.

Steel Tube Institute OF NORTH AMERICA

Page : 2 Of 4

Metals Service Center Institute

Figure B-12. Steel Tube Material Certificate, Test No. NJPCB-2

Customer Name	Customer PO#	Shipper No	Heat Number
Seibel Modern Mfg.	Leon	273924	1422428

Atlas ABC Corp (Atlas Tube Chicago)
1855 East 122nd Street
Chicago, Illinois, USA
60633
Tel: 773-646-4500
Fax: 773-646-6128

Atlas Tube
JMC STEEL GROUP

Ref.B/L: 80660765
Date: 04.15.2015
Customer: 1497

MATERIAL TEST REPORT

Sold to
Triad Metals International
1 Village Road
HORSHAM PA 19044-3812
USA

Shipped to
Triad Metals International
3507 Grand Avenue
PITTSBURGH PA 15225
USA

Material: 4.0x4.0x500x40'0"0(4x2). Material No: 400405004000 Made in: USA
Melted in: Russian Fed.
Sales order: 989623 Purchase Order: 75462

Heat No	C	Mn	P	S	Si	Al	Cu	Cb	Mo	Ni	Cr	V	Ti	B	N
1422428	0.200	0.930	0.007	0.010	0.013	0.043	0.040	0.000	0.000	0.020	0.030	0.000	0.000	0.000	0.006

Bundle No	PCs	Yield	Tensile	Eln.2in	Certification
M800549020	3	070619 Psi	081004 Psi	36 %	ASTM A500-13 GRADE B&C

CE: 0.37

Material Note:
Sales Or.Note:

Material: 4.0x4.0x500x40'0"0(4x2). Material No: 400405004000 Made in: USA
Melted in: Russian Fed.
Sales order: 989623 Purchase Order: 75462

Heat No	C	Mn	P	S	Si	Al	Cu	Cb	Mo	Ni	Cr	V	Ti	B	N
1422428	0.200	0.930	0.007	0.010	0.013	0.043	0.040	0.000	0.000	0.020	0.030	0.000	0.000	0.000	0.006

Bundle No	PCs	Yield	Tensile	Eln.2in	Certification
M800549017	8	070619 Psi	081004 Psi	36 %	ASTM A500-13 GRADE B&C

CE: 0.37

Material Note:
Sales Or.Note:

Material: 20.0x4.0x313x48'0"0(1x4). Material No: 2000403134800 Made in: USA
Melted in: USA
Sales order: 994677 Purchase Order: 75051-replacement

Heat No	C	Mn	P	S	Si	Al	Cu	Cb	Mo	Ni	Cr	V	Ti	B	N
A73575	0.200	0.490	0.009	0.002	0.030	0.034	0.120	0.000	0.020	0.060	0.050	0.001	0.002	0.000	0.009

Bundle No	PCs	Yield	Tensile	Eln.2in	Certification
M900754817	4	057121 Psi	074148 Psi	30 %	ASTM A500-13 GRADE B&C

CE: 0.31

Material Note:
Sales Or.Note:

Authorized by Quality Assurance:
The results reported on this report represent the actual attributes of the material furnished and indicate full compliance with all applicable specification and contract requirements.
Certificate calculated using the AWS D1.1 method.

Steel Tube Institute OF NORTH AMERICA

Page : 3 Of 3

Metals Service Center Institute

Figure B-13. Steel Tube Material Certificate, Test No. NJPCB-2

Customer Name	Customer PO#	Shipper No	Heat Number
Seibel Modern Mfg.	Leon	273924	M04495_1

Atlas ABC Corp (Atlas Tube Chicago)
1855 East 122nd Street
Chicago, Illinois, USA
60633
Tel: 773-646-4500
Fax: 773-646-6128

Atlas Tube
JMC STEEL GROUP

Ref.B/L: 80665303
Date: 05.18.2015
Customer: 1497

MATERIAL TEST REPORT

Sold to

Triad Metals International
1 Village Road
HORSHAM PA 19044-3812
USA

Shipped to

Triad Metals International
3507 Grand Avenue
PITTSBURGH PA 15225
USA

Material: 4.0x4.0x500x48'0"0(3x2). Material No: 400405004800 Made in: USA
Melted in: USA

Sales order: 989623 Purchase Order: 75462

Heat No	C	Mn	P	S	Si	Al	Cu	Cb	Mo	Ni	Cr	V	Ti	B	N
M04495_1	0.190	0.750	0.014	0.010	0.019	0.050	0.050	0.004	0.004	0.010	0.040	0.001	0.001	0.000	0.005

Bundle No	PCs	Yield	Tensile	Eln.2in	Certification	CE: 0.33
M800554030	2	072918 Psi	082550 Psi	35 %	ASTM A500-13 GRADE B&C	

Material Note:
Sales Or.Note:

Authorized by Quality Assurance:
The results reported on this report represent the actual attributes of the material furnished and indicate full compliance with all applicable specification and contract requirements.
Carbon calculated using the AWS D1.1 method.

Steel Tube Institute OF NORTH AMERICA

Page : 4 Of 4

Metals Service Center Institute

Figure B-14. Steel Tube Material Test Certificate, Test No. NJPCB-2

Customer Name	Customer PO#	Shipper No	Heat Number
Seibel Modern Mfg.	Leon	273924	T83539

Atlas ABC Corp (Atlas Tube Chicago)
1855 East 122nd Street
Chicago, Illinois, USA
60633
Tel: 773-646-4500
Fax: 773-646-6128

Atlas Tube
JMC STEEL GROUP

Ref.B/L: 80619794
Date: 08.22.2014
Customer: 1497

MATERIAL TEST REPORT

Sold to
Triad Metals International
1 Village Road
HORSHAM PA 19044-3812
USA

Shipped to
Triad Metals International
3500 Neville Road
NEVILLE ISLAND PA 15225
USA

Material: 4.0x4.0x375x48'0"0(4x2). Material No: 400403754800 Made in: USA
Melted in: USA
Sales order: 934921 Purchase Order: 67358

Heat No	C	Mn	P	S	Si	Al	Cu	Cb	Mo	Ni	Cr	V	Ti	B	N
E84203	0.190	0.800	0.015	0.011	0.021	0.050	0.040	0.005	0.006	0.010	0.040	0.001	0.001	0.000	0.004

Bundle No	PCs	Yield	Tensile	Eln.2in	Certification	CE: 0.34
M800504131	8	071476 Psi	081675 Psi	32 %	ASTM A500-13 GRADE B&C	

Material Note:
Sales Or.Note:

Material: 4.0x4.0x500x40'0"0(4x2). Material No: 400405004000 Made in: USA
Melted in: USA
Sales order: 934921 Purchase Order: 67358

Heat No	C	Mn	P	S	Si	Al	Cu	Cb	Mo	Ni	Cr	V	Ti	B	N
T83539	0.200	0.820	0.012	0.007	0.015	0.054	0.020	0.007	0.004	0.010	0.040	0.001	0.001	0.000	0.005

Bundle No	PCs	Yield	Tensile	Eln.2in	Certification	CE: 0.35
M800500342	8	072654 Psi	085933 Psi	29 %	ASTM A500-13 GRADE B&C	

Material Note:
Sales Or.Note:

Material: 12.0x12.0x250x40'0"0(2x2). Material No: 1201202504000 Made in: USA
Melted in: USA
Sales order: 933979 Purchase Order: 67228

Heat No	C	Mn	P	S	Si	Al	Cu	Cb	Mo	Ni	Cr	V	Ti	B	N
T84047	0.180	0.800	0.008	0.007	0.015	0.045	0.020	0.003	0.003	0.010	0.040	0.001	0.001	0.000	0.007

Bundle No	PCs	Yield	Tensile	Eln.2in	Certification	CE: 0.33
M900697115	4	055286 Psi	073956 Psi	28 %	ASTM A500-13 GRADE B&C	

Material Note:
Sales Or.Note:

Marvin Phillips

Authorized by Quality Assurance:
The results reported on this report represent the actual attributes of the material furnished and indicate full compliance with all applicable specification and contract requirements.
CE calculated using the AWS D1.1 method.

Steel Tube Institute OF NORTH AMERICA

Page : 1 Of 4

Metals Service Center Institute

Figure B-15. Steel Tube Material Certificate, Test No. NJPCB-2

Customer Name	Customer PO#	Shipper No	Heat Number
Seibel Modern Mfg.	Leon	273924	SD5020

Independence Tube

6226 W. 74th St
Chicago, IL 60638
708-496-0380
Fax: 708-563-1950

independencetube.com
itctube.com
Certificate Number: DCR 250913

Sold By:
INDEPENDENCE TUBE CORPORATION
6226 W. 74th St.
Chicago, IL 60638
Tel: 708-496-0380
Fax: 708-563-1950

Sold To:
2103 - TRIAD METALS
1 VILLAGE ROAD
HORSHAM, PA 19044-3812

Purchase Order No: 70783
Sales Order No: DCR 64130 - 5
Bill of Lading No: DCR 43787 - 94
Invoice No:

Shipped: 1/16/2015
Invoiced:

Ship To:
39 - TRIAD METALS BARGE
MILE MARKER 7.3
OHIO RIVER
NEVILLE ISLAND, PA 15225

CERTIFICATE of ANALYSIS and TESTS
Customer Part No:

TUBING A500 GRADE B(C)
4" SQ X 1/2" X 48'

Certificate No: DCR 250913
Test Date: 1/14/2015

Total Pieces	Total Weight
36	37,376

Bundle Tag	Mill	Heat	Pieces	Weight
844458	40	SD5020	9	9,344
844459	40	SD5020	9	9,344
844460	40	SD5020	9	9,344
844461	40	SD5020	9	9,344

Mill #: 40 Heat #: SD5020 Yield: 72,300 psi Tensile: 78,800 psi Elongation: 28.50 % Y/T Ratio: 0.9175 Carbon Eq: 0.1352

C	Mn	P	S	Si	Al	Cu	Cr	Mo	V	Ni	Nb
0.0500	0.3900	0.0090	0.0040	0.2240	0.0260	0.0900	0.0400	0.0200	0.0010	0.0300	0.0080

Certification:

I certify that the above results are a true and correct copy of records prepared and maintained by Independence Tube Corporation. Sworn this day, 1/14/2015

WE PROUDLY MANUFACTURE ALL OF OUR HSS IN THE USA.
INDEPENDENCE TUBE PRODUCT IS MANUFACTURED, TESTED, AND INSPECTED IN ACCORDANCE WITH ASTM STANDARDS.

CURRENT STANDARDS:
.....A500/A500M-13
.....A513-12
.....A252-10
.....A847/A847M-12

MATERIAL IDENTIFIED AS A500 GRADE B(C) MEETS BOTH ASTM A500 GRADE B AND A500 GRADE C SPECIFICATIONS.

Jose Martinez, QMS Manager

Figure B-16. Steel Tube Material Certificate, Test No. NJPCB-2

MID-AMERICA STEEL CORPORATION
TEST REPORT

No. F33822

TO: SEIBEL MODERN MFG & WELDING

DATE: 02/19/13
P.O. #: SBJ-40

ATTN:

TAG#	SIZE	SPEC
K78419	1/4 x 48.000 x 144.000	A-36
K78420	1/4 x 48.000 x 144.000	A-36
K78421	1/4 x 48.000 x 144.000	A-36
K78422	1/4 x 48.000 x 144.000	A-36

CHEMICAL ANALYSIS

TAG#	HEAT#	C	Mn	P	S
K78419	1129849	0.063	0.760	0.012	0.004
K78420	1129849	0.063	0.760	0.012	0.004
K78421	1129849	0.063	0.760	0.012	0.004
K78422	1129849	0.063	0.760	0.012	0.004

PHYSICAL ANALYSIS

TAG#	HEAT#	TENSILE	YIELD	ELONGATION
K78419	1129849	75,102	58,422	26%
K78420	1129849	75,102	58,422	26%
K78421	1129849	75,102	58,422	26%
K78422	1129849	75,102	58,422	26%

All material made and melted in the U.S.

Thank you,

JOHN RATICA
MID-AMERICA STEEL CORPORATION

Figure B-17. 2-in. × ¼-in. (51-mm × 6-mm) Bent Steel Plate, Test No. NJPCB-2

ArcelorMittal

ArcelorMittal LaPlace
(HARRIMAN)
2404 S. ROANE STREET
HARRIMAN, TENNESSEE 37748
Telephone (865) 882-5100

MATERIAL CERTIFICATION REPORT
METAL TRADER INC, (TRIAD METAL)
1 Village Road
HORSHAM PA 19044
ETATS-UNIS

TRIAD METALS INTERNATIONAL
(WASSELL LAND)
3507 Grand Avenue
PITTSBURGH PA 15225
USA

Tested in Accordance
With: ASTM A6

Sales Order	140953-4	Date	09/09/2015	PO:	81536
Product	Flat bars	Cust	40008882	Ref.	80833851
Heat NO.	L99837	Grade	A3652950	Pieces	288
Cust.Mat.		Length	20' 00"	Weight	19607.04
Size	2" X1/2" X3.404				

CHEMICAL ANALYSIS	
C	0.13
Mn	0.88
P	0.007
S	0.018
Si	0.19
Cu	0.24
Ni	0.17
Cr	0.14
Mo	0.065
Cb	0.020
V	0
B	
Al	
Sn	0.012
N	
Ti	
Ci	
CE	

MECHANICAL PROPERTIES	TEST 1 IMPERIAL	TEST 1 METRIC	TEST 2 IMPERIAL	TEST 2 METRIC	TEST 3 IMPERIAL	TEST 3 METRIC
YIELD STRENGTH	52710 PSI	363 MPa	53770 PSI	371 MPa		
TENSILE STRENGTH	72220 PSI	498 MPa	74560 PSI	514 MPa		
ELONGATION	25 %	25 %	25 %	25 %		
GAUGE LENGTH	8 IN	203 mm	8 IN	203 mm		
BEND TEST DIAMETER						
BEND TEST RESULTS						
SPECIMEN AREA						
REDUCTION OF AREA						
IMPACT STRENGTH						

IMPACT STRENGTH	IMPERIAL	METRIC	INTERNAL CLEANLINESS		GRAIN SIZE	
AVERAGE			SEVERITY		HARDNESS	
TEST TEMP			FREQUENCY		GRAIN PRACTICE	
ORIENTATION			RATING		REDUCTION RATIO	

This heat makes the following grades: A36-08,A52950-05,G40.21-CSA50W,CSA44W,A70936-09a, ASME SA36-2010, A57250-07, A70950-10, AASHTO M270 Grade 36,AASHTO M270 Grade 50, AASHTO M270M Grade 345.

I hereby certify that the material test results presented here are from the reported heat and are correct. All tests were performed in accordance to the specification reported above. All steel is electric arc furnace melted (billets), manufactured, processed, tested in the U.S.A with satisfactory results. No weld repair was performed on this heat.

Notarized upon request:
Sworn to and subscribed before me on 9th day of September, 2015
MANAGER

Notary Public _____ County _____

Signed Keith D Limburg
KEITH D. LIMBURG, QUALITY ASSURANCE

Direct any questions or necessary clarifications concerning this report to the Sales Department 1-800-535-7692(USA)

Figure B-18. ½-in. (13-mm) Thick Steel Plate Material Certificate

GERDAU

US-ML-CHARLOTTE
6601 LAKEVIEW ROAD
CHARLOTTE, NC 28269
USA

CERTIFIED MATERIAL TEST REPORT

Page 1/1

CUSTOMER SHIP TO	CUSTOMER BILL TO	GRADE	SHAPE / SIZE
TRIAD METALS 3507 GRAND AVE PITTSBURGH,PA 15225 USA	TRIAD METALS INTERNATIONAL MET 1 VILLAGE RD HORSHAM,PA 19044-3800 USA	GGMULTI	Flat / 1/2 X 2 1/4

LENGTH	WEIGHT	HEAT / BATCH
20'00"	4,979 LB	54144612/03

SALES ORDER	CUSTOMER MATERIAL N°	SPECIFICATION / DATE or REVISION
2819476/000010		A6-13A,A36-12, ASME SA36-13 ASTM A529-05(2009), A572-13A ASTM A709-13A, AASHTO M270-12 CSA G40.20-13/G40.21-13

CUSTOMER PURCHASE ORDER NUMBER	BILL OF LADING	DATE
85055W	1321-0000034345	09/24/2015

CHEMICAL COMPOSITION

C %	Mn %	P %	S %	Si %	Cu %	Ni %	Cr %	Mo %	V %	Nb %	Sn %
0.17	0.71	0.011	0.033	0.20	0.47	0.14	0.17	0.030	0.015	0.002	0.013

MECHANICAL PROPERTIES

Elong. %	G/L Inch	UTS PSI	UTS MPa	YS PSI	YS MPa
29.40	8.000	74174	511	51422	355

GEOMETRIC CHARACTERISTICS

R:R
22.00

COMMENTS / NOTES

This grade meets the requirements for the following grades:
ASTM Grades: A36; A529-50; A572-50; A709-36; A709-50
CSA Grades: 44W; 50W
AASHTO Grades: M270-36; M270-50
ASME Grades: SA36

The above figures are certified chemical and physical test records as contained in the permanent records of company. We certify that these data are correct and in compliance with specified requirements. This material, including the billets, was melted and manufactured in the USA. CMTR complies with EN 10204 3.1.

BHASKAR YALAMANCHILI
QUALITY DIRECTOR

JORDAN FOSTER
QUALITY ASSURANCE MGR.

Figure B-19. ½-in. (13-mm) Thick Steel Plate Material Certificate, Test No. NJPCB-2

DAYTON® SUPERIOR

1107 Advantage Grout

Cement Based Grout

TECHNICAL DATA SHEET

DESCRIPTION

The 1107 Advantage Grout is a non-shrink, non-metallic, non-corrosive, cementitious grout that is designed to provide a controlled, positive expansion to ensure an excellent bearing area. The 1107 Advantage Grout can be mixed from a fluid to a dry pack consistency.

USE

Exterior grouting of structural column base plates, pump and machinery bases, anchoring bolts, dowels, bearing pads and keyway joints. It finds applications in paper mills, oil refineries, food plants, chemical plants, sewage and water treatment plants etc.

FEATURES

- Controlled, net positive expansion
- Non shrink
- Non metallic/non corrosive
- Pourable, pumpable or dry pack consistency
- Interior/exterior applications

PROPERTIES

Corps of Engineers Specification for non-shrink grout:

CRD-C 621 Grades A, B, C

ASTM C-1107 Grades A, B, C

ASTM C-827 - 1107 Advantage Grout yielded a controlled positive expansion

Expansion - ASTM C-1090:

1 day: 0-0.3

3 days: 0-0.3

14 days: 0-0.3

28 days: 0-0.3

Test Results

	@ 1 Day		@ 3 Days		@ 7 Days		@ 28 Days	
Fluidity	PSI	MPa	PSI	MPa	PSI	MPa	PSI	MPa
Dry-Pack	5000	34.5	7000	48.2	9000	62.0	10000	68.9
Flowable	2500	17.2	5000	34.5	6000	41.4	8000	55.1
Fluid	2000	13.8	4000	27.6	5000	34.5	7500	51.7

Note:
The data shown is typical for controlled laboratory conditions. Reasonable variation from these results can be expected due to interlaboratory precision and bias. When testing the field mixed material, other factors such as variations in mixing, water content, temperature and curing conditions should be considered.

Estimating Guide

Yield (Flowable Consistency):
0.43 cu. ft./50 lbs. (0.0122 cu. M/22.67 kg) bag
0.59 cu. ft./50 lbs. (0.017 cu. M/22.67 kg) bag extended with 25 lbs. (11.34 kg) of washed 3/8 in. (1cm) pea gravel

Packaging

PRODUCT CODE	PACKAGE	SIZE	
		lbs	kg
67435	Bag	50	22.67
67437	Supersack	3,000	1,360.78

STORAGE

Store in a cool, dry area free from direct sunlight. Shelf life of unopened bags, when stored in a dry facility, is 12 months. Excessive temperature differential and /or high humidity can shorten the shelf life expectancy.

APPLICATION

Surface Preparation:
Thoroughly clean all contact surfaces. Existing concrete should be strong and sound. Surface should be roughened to insure bond. Metal base plates should be clean and free of oil and other contaminants. Maintain contact areas between 45°F (7°C) and 90°F (32°C) before grouting and during curing period.

Thoroughly wet concrete contact area 24 hours prior to grouting, keep wet and remove all surface water just prior to placement. If 24 hours is not possible, then saturate with water for at least 4 hours. Seal forms to prevent water or grout loss. On the placement side, provide an angle in the form high enough to assist in grouting and to maintain head pressure on the grout during the entire grouting process. Forms should be at least 1 in. (2.5 cm) higher than the bottom of the base plate.

Water Requirements:
Desired Mix Water / 50 lbs. (22.67 kg) Bag
Dry Pack: 5 pints (2.4 L)
Flowable: 8 pints (3.8 L)
Fluid: 9 pints (4.2 L)

Mixing:
A mechanical mixer with rotating blades like a mortar mixer is best. Small quantities can be mixed with a drill and paddle. When mixing less than a full bag, always first agitate the bag thoroughly so that a representative sample is obtained.

Sec 16

Grouts

Visit www.daytonsuperior.com for the most up to date technical information

Page 1 of 3

File Date: 3/27/2015

Figure B-20. Non-Shrink Grout Specifications, Test No. NJPCB-2

DAYTON SUPERIOR

1107 Advantage Grout

Cement Based Grout

TECHNICAL DATA SHEET

Place approximately 3/4 of the anticipated mix water into the mixer and add the grout mix, adding the minimum additional water necessary to achieve desired consistency.
Mix for a total of five minutes ensuring uniform consistency. For placements greater in depth than 3 in. (7.6 cm), up to 25 lbs. (11.34 kg) of washed 3/8 in. (1 cm) pea gravel must be added to each 50 lbs. (22.67 kg) bag of grout. The approximate working time (pot life) is 30 minutes but will vary somewhat with ambient conditions.

For hot weather conditions, greater than 85°F (29°C), mix with cold water approximately 40°F (4°C).
For cold weather conditions, less than 50°F (10°C), mix with warm water, approximately 90°F (29°C). For additional hot and cold weather applications, contact Dayton Superior.

Placement:
Grout should be placed preferably from one side using a grout box to avoid entrapping air. Grout should not be over-worked or over-watered causing segregation or bleeding. Vent holes should be provided where necessary.
When possible, grout bolt holes first. Placement and consolidation should be continuous for any one section of the grout. When nearby equipment causes vibration of the grout, such equipment should be shut down for a period of 24 hours. Forms may be removed when grout is completely self-supporting. For best results, grout should extend downward at a 45 degree angle from the lower edge of the steel base plates or similar structures.

Sec 16 Grouts

CLEAN UP
Use clean water. Hardened material will require mechanical removal methods.

CURING
Exposed grout surfaces must be cured. Dayton Superior recommends using a Dayton Superior curing compound, cure & seal or a wet cure for 3 days. Maintain the temperature of the grout and contact area at 45°F (7°C) to 90°F (32°C) for a minimum of 24 hours.

LIMITATIONS

FOR PROFESSIONAL USE ONLY
Do not re-temper after initial mixing
Do not add other
cements or additives
Setting time for the 1107 Advantage Grout will slow during cooler weather, less than 50°F (10°C) and speed up during hot weather, greater than 80°F (27°C)
Prepackaged material segregates while in the bag, thus when mixing less than a full bag it is recommended to first agitate the bag to assure it is blended prior to sampling.

PRECAUTIONS

READ SDS PRIOR TO USING PRODUCT

- Product contains Crystalline Silica and Portland Cement Avoid breathing dust Silica may cause serious lung problems
- Use with adequate ventilation
  n Wear protective clothing, gloves and eye protection (goggles, safety glasses and/or face shield)
- Keep out of the reach of children
- Do not take internally
- In case of ingestion, seek medical help immediately
- May cause skin irritation upon contact, especially prolonged or repeated. If skin contact occurs, wash immediately with soap and water and seek medical help as needed.
- If eye contact occurs, flush immediately with clean water and seek medical help as needed
- Dispose of waste material in accordanc

MANUFACTURER
Dayton Superior Corporation
1125 Byers Road
Miamisburg, OH 45342
Customer Service: 888-977-9600
Technical Services: 877-266-7732
Website: www.daytonsuperior.com

WARRANTY
Dayton Superior Corporation ("Dayton") warrants for 12 months from the date of manufacture or for the duration of the published product shelf life, whichever is less, that at the time of shipment by Dayton, the product is free of manufacturing defects and conforms to Dayton's product properties in force on the date of acceptance by Dayton of the order. Dayton shall only be liable under this warranty if the product has been applied, used, and stored in accordance with Dayton's instructions, especially surface preparation and installation, in force on the date of acceptance by Dayton of the order. The purchaser must examine the product when received and promptly notify Dayton in writing of any non-conformity before the product is used and no later than 30 days after such non-conformity is first discovered. If Dayton, in its sole discretion, determines that the product breached the above warranty, it will, in its sole discretion, replace the non-conforming product, refund the purchase price or issue a credit in the amount of the purchase price. This is the sole and exclusive remedy for breach of this warranty. Only a Dayton officer is authorized to modify this warranty. The information in this data sheet supersedes all other sales information received by the customer during the sales process. THE FOREGOING WARRANTY SHALL BE EXCLUSIVE AND IN LIEU OF ANY OTHER WARRANTIES, EXPRESS OR IMPLIED, INCLUDING WARRANTIES OF MERCHANTABILITY AND FITNESS FOR A PARTICULAR PURPOSE, AND ALL OTHER WARRANTIES OTHERWISE ARISING BY OPERATION OF LAW, COURSE OF DEALING, CUSTOM, TRADE OR OTHERWISE.

Visit www.daytonsuperior.com for the most up to date technical information
Page 2 of 3 File Date: 3/27/2015

Figure B-21. Non-Shrink Grout Specifications, Test No. NJPCB-2

GERDAU AMERISTEEL

SAND SPRINGS STEEL MILL
P.O. BOX 218
SAND SPRINGS OK 74063 USA
(918) 245-1335

Chemical and Physical Test Report

MADE IN UNITED STATES

FEB 22 2016

OK-027841

PRODUCED IN: SAND SPRINGS

SHIP TO	INVOICE TO	SHIP DATE
TSA MANUFACTURING INC 14901 CHANDLER RD OMAHA, NE 68138	TSA MANUFACTURING INC. 14901 CHANDLER ROAD OMAHA, NE 68138	05/01/08 CUST. ACCOUNT NO 60210637

SHAPE + SIZE	GRADE	SPECIFICATION	SALES ORDER	CUST P.O. NUMBER
R.910SBQ	A36	ASTM A36 & F1554-36-WELDABLE	8049572-01	20981-01

HEAT I.D.	C	Mn	P	S	Si	Cu	Ni	Cr	Mo	V	Nb	N	Sn	Al	Ti	C Eqv
0723104 MT 3671	.15	.85	.012	.019	.20	.15	.06	.08	.020	.006	.002	.0074	.007	.001	.00100	.325

Mechanical Test: Yield 51400 PSI, 354.39 MPA Tensile: 70500 PSI, 486.08 MPA %El: 31.3/8in, 31.3/203.2mm Bend: %R.A.: 52
CUST ITEM NUMBER: 4HR360910240

SHAPE + SIZE	GRADE	SPECIFICATION	SALES ORDER	CUST P.O. NUMBER
R.910SBQ	A36	ASTM A36 & F1554-36-WELDABLE	8049572-01	20981-01

HEAT I.D.	C	Mn	P	S	Si	Cu	Ni	Cr	Mo	V	Nb	N	Sn	Al	Ti	C Eqv
0817835 MT 3672	.13	.76	.013	.027	.20	.18	.11	.12	.030	.005	<.008	.0000	.011	.000	.00100	.31

Mechanical Test: Yield 44700 PSI, 308.2 MPA Tensile: 63200 PSI, 435.75 MPA %El: 30.0/8in, 30.0/203.2mm Bend: %R.A.: 61
CUST ITEM NUMBER: 4HR360910240

1-8x14" Threaded Rod ASTM F1554 Grade 36
NJPCB-2 R#16-391 MT3672
Supplier stated that both heat numbers were applicable.
February 2016 SMT

This material, including the billets, was produced and manufactured in the United States of America

Bhaskar Yalamanchili
Quality Director
Gerdau Ameristeel

THE ABOVE FIGURES ARE CERTIFIED EXTRACTS FROM THE ORIGINAL CHEMICAL AND PHYSICAL TEST RECORDS AS CONTAINED IN THE PERMANENT RECORDS OF COMPANY.

Mgr. Metallurg. Svcs.
SAND SPRINGS STEEL MILL

Seller warrants that all material furnished shall comply with specifications subject to standard published manufacturing variations. NO OTHER WARRANTIES, EXPRESSED OR IMPLIED, ARE MADE BY THE SELLER, AND SPECIFICALLY EXCLUDED ARE WARRANTIES OF MERCHANTABILITY AND FITNESS FOR A PARTICULAR PURPOSE.
In no event shall seller be liable for indirect, consequential or punitive damages arising out of or related to the materials furnished by seller.
Any claim for damages for materials that do not conform to specifications must be made from buyer to seller immediately after delivery of same in order to allow the seller the opportunity to inspect the material in question.

Figure B-22. Threaded Rods Material Certificate, Test No. NJPCB-2

Certified Material Test Report to BS EN 10204-2004 3.1
FOR ASTM A563, GRADE A FIN HEX NUTS

FACTORY HAIYAN GUANGMING HARDWARE CO.,LTD. DATE: 2016.1.20
ADDRESS JIXING ROAD 206#,NEW INDUSTRY ZONE,WUYUAN TOWN,HAIYAN,ZHEJIANG,CHINA
MFG LOT NUMBER JS2015134-4

CUSTOMER

PO NUMBER: PO#210092663

SAMPLE SIZE : ACC. TO ASME B18. 18-2011
SIZE: 1-8 PLAIN QNTY: 1800 PCS PART NO 36119

STEEL PROPERTIES
STEEL GRADE: C1008 HEAT NUMBER:G420007179

R#16-399 NJPCB-2
1"-8 Nuts
February 2016 SMT

CHEMISTRY SPEC:	C %*100	Mn%*100	P %*1000	S %*1000
	0.55max	min	0.12max	0.15max
TEST:	0.06	0.27	0.010	0.006

DIMENSIONAL INSPECTIONS SPECIFICATION: ASME B18.2.2-2010

CHARACTERISTICS	TEST METHOD	SPECIFIED	ACTUAL RESULT	ACC.	REJ.
APPEARANCE	ASTM F812/F812M-07		PASSED	100	0
THREAD	ASME B1.3		PASSED	32	0
ACROSS FLATS		1.450-1.500	1.462-1.496	32	0
WIDTH A/C		1.653-1.732	1.679-1.721	8	0
HEIGHT		0.831-0.887	0.857-0.881	8	0
MARK	NO MARKING		PASSED	100	0

MECHANICAL PROPERTIES: 1/4"to 1 1/2" SPECIFICATION: ASTM A563-07a GR-A

CHARACTERISTICS	TEST METHOD	SPECIFIED	ACTUAL RESULT	ACC.	REJ.
HARDNESS :	ASTM F606-2010a	B68-C32 Max(107HRE	HRC20-HRC25	8	0
PROOF LOAD:	ASTM F606-2010a	MIN 90000 PSI	90030PSI	4	0

ALL TESTS IN ACCORDANCE WITH THE METHODS PRESCRIBED IN THE APPLICABLE ASTM OR SAE SPECIFICATION. WE CERTIFY THATTHIS DATA IS A TRUE REPRESENTATION OF INFORMATION PROVIDED BY THE MATERIAL SUPPLIER AND OUR TESTING LABORATORY.
All parts meet the requirements of FQA and records of compliance are on file.
Maker's ISO#626012Q11102ROS

(SIGNATURE OF QA LAB MGR.)
(NAME OF MANUFACTURER)

Figure B-23. Anchor Nuts Material Certificate, Test No. NJPCB-2

Certified Material Test Report to BS EN 10204-2004 3.1
FOR ASTM A563, GRADE A HEX FIN NUTS

FACTORY: IFI & Morgan Ltd. Haiyan Office
ADDRESS: Haiyan, Zhejiang, China

DATE: 2015-03-15

MFG LOT NUMBER: GL15158-1

CUSTOMER: FASTELNAL

PO NUMBER:220019732

SAMPLE PLAN : ACC. TO ASME B18.18 - 2011
SIZE: 1"-8 PLN QNTY: 21600 PCS

PART NO: 36119

STEEL PROPERTIES
STEEL GRADE: Q195LD

HEAT NUMBER: G15-1438

CHEMISTRY SPEC:	C %*100 0.55max	Mn%*100 min	P %*1000 0.12max	S %*1000 0.15max
TEST:	0.07	0.29	0.022	0.011

DIMENSIONAL INSPECTIONS — SPECIFICATION: ASME B18.2.2-2010

CHARACTERISTICS	TEST METHOD	SPECIFIED	ACTUAL RESULT	ACC.	REJ.
APPEARANCE	ASTM F812/F812M-07		PASSED	100	0
THREAD	ASME B1.3		PASSED	32	0
WIDTH A/F		1.500-1.450	1.486-1.484	32	0
WIDTH A/C		1.732-1.653	1.696-1.694	8	0
HEIGHT		0.887-0.831	0.853-0.851	8	0
MARK	NO MARKING		PASSED	100	0

MECHANICAL PROPERTIES: 1/4" to 1 1/2" — SPECIFICATION: ASTM A563-07a GR-A

CHARACTERISTICS	TEST METHOD	SPECIFIED	ACTUAL RESULT	ACC.	REJ.
HARDNESS :	ASTM F606-2010a	B68-C32 Max(107HRB	85-87HRB	8	0
PROOF LOAD :	ASTM F606-2010a	Min68 Ksi	PASSED	4	0

ALL TESTS IN ACCORDANCE WITH THE METHODS PRESCRIBED IN THE APPLICABLE ASTM OR SAE SPECIFICATION. WE CERTIFY THAT THIS DATA IS A TRUE REPRESENTATION OF INFORMATION PROVIDED BY THE MATERIAL SUPPLIER AND OUR TESTING LABORATORY.

(SIGNATURE OF Q.A. LAB MGR.)
(NAME OF MANUFACTURER)

We were shorted one nut for the NJ PCB-2 Project.
This MTR applies to one Nut in the system that has been painted white.
No Requisition number it was given to me for free.
March 2016 SMT

Figure B-24. Barrier No. 1 Anchor Nut Material Certificate, Test No. NJPCB-2

STEEL AND PIPE SUPPLY

SPS Coil Processing Tulsa
5275 Bird Creek Ave.
Port of Catoosa, OK 74015

METALLURGICAL TEST REPORT

PAGE 1 of 1
DATE 01/11/2016
TIME 11:19:51
USER WILLIAMR

SOLD TO 66031-1127

SHIP TO 13716
Kansas City Warehouse
401 New Century Parkway
NEW CENTURY KS

Order	Material No.	Description	Quantity	Weight	Customer Part	Customer PO	Ship Date
40255291-0040	70872120TM	1/4 72 X 120 A36 TEMPERPASS STPMLPL	4	2,450.400			01/11/2016

Chemical Analysis

Heat No. B514901 Vendor STEEL DYNAMICS COLUMBUS DOMESTIC Mill STEEL DYNAMICS COLUMBUS **Melted and Manufactured in the USA**
Batch 0004172846 4 EA 2,450.400 LB **Produced from Coil**

Carbon	Manganese	Phosphorus	Sulphur	Silicon	Nickel	Chromium	Molybdenum	Boron	Copper	Aluminum	Titanium	Vanadium	Columbium	Nitrogen	Tin
0.1900	0.8200	0.0200	0.0020	0.0300	0.0300	0.0700	0.0100	0.0001	0.0800	0.0280	0.0000	0.0040	0.0010	0.0018	0.0040

Mechanical/ Physical Properties

Mill Coil No. 15B570344

Tensile	Yield	Elong	Rckwl	Grain	Charpy	Charpy Dr	Charpy Sz	Temperature	Olsen

NJPCB-2 Square Washers
R#16-390 H#B514901
February 2016 SMT

THE CHEMICAL, PHYSICAL, OR MECHANICAL TESTS REPORTED ABOVE ACCURATELY REFLECT INFORMATION AS CONTAINED IN THE RECORDS OF THE CORPORATION.

Figure B-25. Anchor Square Washers Material Certificate, Test No. NJPCB-2

Bond Strength Design Information for Reinforcing Bar
(For use with load combinations taken from ACI 318 Section 9.2)[1,2]

Design Information		Symbol	Units	Nominal Rod Diameter (Inch) / Reinforcing Bar Size							
				#3	#4	#5	#6	#7	#8	#9	#10
Minimum embedment		$h_{ef,min}$	inch (mm)	2-3/8 (60)	2-3/4 (70)	3-1/8 (79)	3-1/2 (89)	3-1/2 (89)	4 (102)	4-1/2 (114)	5 (127)
Maximum embedment		$h_{ef,max}$	inch (mm)	4-1/2 (114)	6 (152)	7-1/2 (191)	9 (229)	10-1/2 (267)	12 (305)	13-1/2 (343)	15 (381)
75°F (24°C) Maximum Long-Term Service Temperature; 104°F (40°C) Maximum Short-Term Service Temperature[4,9]	Characteristic bond strength in cracked concrete[4,7]	$\tau_{k,cr}$	psi (N/mm²)	Not Applicable	871 (6.0)	907 (6.3)	907 (6.3)	907 (6.3)	918 (6.3)	918 (6.3)	918 (6.3)
	Characteristic bond strength in uncracked concrete[5,8]	$\tau_{k,uncr}$	psi (N/mm²)	1,450 (10.0)	1,450 (10.0)	1,450 (10.0)	1,450 (10.0)	1,450 (10.0)	1,305 (9.0)	1,160 (8.0)	1,030 (7.1)
122°F (50°C) Maximum Long-Term Service Temperature; 176°F (80°C) Maximum Short-Term Service Temperature[3,4]	Characteristic bond strength in cracked concrete[4,7]	$\tau_{k,cr}$	psi (N/mm²)	Not Applicable	331 (2.3)	345 (2.4)	345 (2.4)	345 (2.4)	345 (2.4)	349 (2.4)	349 (2.4)
	Characteristic bond strength in uncracked concrete[4,8]	$\tau_{k,uncr}$	psi (N/mm²)	823 (5.7)	823 (5.7)	823 (5.7)	823 (5.7)	823 (5.7)	743 (5.1)	655 (4.5)	588 (4.1)
									Not applicable in water-filled hole installation condition		
162°F (72°C) Maximum Long-Term Service Temperature; 248°F (120°C) Maximum Short-Term Service Temperature[3,4]	Characteristic bond strength in cracked concrete[4,7]	$\tau_{k,cr}$	psi (N/mm²)	Not Applicable	163 (1.1)	170 (1.2)	170 (1.2)	170 (1.2)	170 (1.2)	170 (1.2)	170 (1.2)
	Characteristic bond strength in uncracked concrete[4,8]	$\tau_{k,uncr}$	psi (N/mm²)	405 (2.8)	405 (2.8)	405 (2.8)	405 (2.8)	405 (2.8)	366 (2.5)	329 (2.3)	Not Applicable
								Not applicable in water-filled hole installation condition			
Permissible installation conditions[7]	Dry concrete	ϕ_d	-	0.65				0.65	0.65	0.65	0.65
	Water-saturated concrete	ϕ_{ws}	-	0.55				0.55	0.55	0.55	0.55
	Water-filled hole (flooded)	ϕ_{wf}	-	0.45				0.45	0.45	0.45	0.45
		κ_{wf}		0.78				0.70	0.69	0.68	0.67
Reduction factor for seismic tension[9]		$\alpha_{N,seis}$	-	0.95							

For SI: 1 inch = 25.4 mm, 1 psi = 0.006894 MPa. For pound-inch units: 1 mm = 0.03937 inch, 1 MPa = 145.0 psi.

1. Bond strength values correspond to a normal-weight concrete compressive strength f'c = 2,500 psi (17.2 MPa). For concrete compressive strength, f'c between 2,500 psi and 8,000 psi (17.2 MPa and 55.2 MPa), the tabulated characteristic bond strength may be increased by a factor of $(f'c / 2{,}500)^{0.13}$ [For SI: $(f'c / 17.2)^{0.13}$].
2. The modification factor for bond strength of adhesive anchors in lightweight concrete shall be taken as given in ACI 318 D.3.6, where applicable.
3. Long-term and short-term temperatures meet the requirements of Section 8.5 of ACI 355.4 and Table 9.1, Temperature Category A.
4. Short-term base material service temperatures are those that occur over brief intervals, e.g. as a result of diurnal cycling. Long-term base material service temperatures are roughly constant over significant periods of time.
5. Characteristic bond strengths are for sustained loads including dead and live loads.
6. Permissible installation conditions include dry concrete, water-saturated concrete and water-filled holes. Water-filled holes include applications in dry or water-saturated concrete where the drilled holes contain standing water at the time of anchor installation.
7. For structures assigned to Seismic Design Categories C, D, E or F, the tabulated bond strength values for cracked concrete must be adjusted by an additional reduction factor, $\alpha_{N,seis}$, as given in this table.
8. Bond strength values for uncracked concrete are applicable for structures assigned to Seismic Design Categories A and B only.
9. **Room temperature range is not recognized by ACI 318-11 and does not meet the minimum temperature requirement of ACI 355.4, Table 8.1 and consequently is not applicable to design under ACI 318-11 or current and past editions of the International Building Code (IBC). The tabulated values are provided for analysis and evaluation of existing conditions only.**

TECH MANUAL—ADHESIVE ANCHORS ©2015 POWERS VOLUME 1—9/2015—REV. L

Figure B-26. Epoxy Bond Strength, Test No. NJPCB-2 [17]

Appendix C. Concrete Tarmac Strength

LINCOLN OFFICE
825 J Street
Lincoln, NE 68508
402/479-2200

benesch
engineers · scientists · planners

COMPRESSION TEST OF Cylindrical CONCRETE SPECIMENS
ASTM Designation: C39-03

Client:	UNL	Date:	December 10, 2010
Project:	MwRSF		
Placement Location:	WI - East 1, 2, 3		
Mix Type:	Class:	Mix No.:	

Type of Forms		Cement Factor, Sks/Yd	na
		Water-Cement Ratio	na
Admixture Quantity	na	Slump Inches	na
Admixture Type	na	Unit Wt, lbs/cu. Ft.	na
Admixture Quantity	na	Air Content, %	na
Average Field Temperature	na	Batch Volume, Cu. Yds.	na
Temperature of Concrete F	na	Ticket No.	na

Identification Laboratory	East 1	East 2	East 3			
Date Cast						
Date Received in Laboratory	11/30/2010	11/30/2010	11/30/2010			
Date Tested						
Days Cured in Field						
Days Cured in Laboratory						
Age of Test, Days						
Length, in.	7.78	7.81	7.75			
Average Width (1), in.	3.72	3.72	3.72			
Cross-Sectional Area, sq. in.	10.874	10.869	10.874			
Maximum Load, lbf	71,030	76,470	73,310			
Compressive Stength, psi	6,530	7,040	6,740			
Length/Diameter Ratio	2.091	2.099	2.083			
Correction						
Corrected Compressive Strength,psi	0	0	0			
Type of Fracture	4	4	4			
Required Strength,psi						

Remarks:

All concrete break data in this report was produced by Benesch personnel using ASTM Standard Methods and Practices unless otherwise noted.

This report shall not be reproduced except in full, without the written approval of Alfred Benesch & Company

ALFRED BENESCH & COMPANY
CONSTRUCTION MATERIALS LABORATORY

By: Raymond Delka
Raymond E. Delka, Manager

Figure C-1. Concrete Tarmac Strength Test, Test No. NJPCB-2

LINCOLN OFFICE
825 J Street
Lincoln, NE 68508
402/479-2200

benesch
engineers · scientists · planners

COMPRESSION TEST OF Cylindrical CONCRETE SPECIMENS
ASTM Designation: C39-03

Client:	UNL		Date:	December 13, 2010		
Project:	MwRSF					
Placement Location:	WI - Epoxy West 4 &5					
Mix Type:	Class:		Mix No.:			
Type of Forms			Cement Factor, Sks/Yd		na	
			Water-Cement Ratio		na	
Admixture Quantity	na		Slump Inches		na	
Admixture Type	na		Unit Wt, lbs/cu. Ft.		na	
Admixture Quantity	na		Air Content, %		na	
Average Field Temperature	na		Batch Volume, Cu. Yds.		na	
Temperature of Concrete F	na		Ticket No.		na	
Identification Laboratory	4	5				
Date Cast						
Date Received in Laboratory	12/13/2010	12/13/2010				
Date Tested						
Days Cured in Field						
Days Cured in Laboratory						
Age of Test, Days	na	na				
Length, in.	8.05	8.06				
Average Width (1), in.	3.91	3.90				
Cross-Sectional Area, sq. in.	11.977	11.952				
Maximum Load, lbf	71,500	71,630				
Compressive Stength, psi	5,970	5,990				
Length/Diameter Ratio	2.061	2.065				
Correction						
Corrected Compressive Strength,psi	0	0				
Type of Fracture	3	3				
Required Strength,psi						

Remarks:

All concrete break data in this report was produced by Benesch personnel using ASTM Standard Methods and Practices unless otherwise noted.

This report shall not be reproduced except in full, without the written approval of Alfred Benesch & Company

ALFRED BENESCH & COMPANY
CONSTRUCTION MATERIALS LABORATORY

By: Raymond Delka
Raymond E. Delka, Manager

Figure C-2. Concrete Tarmac Strength Test, Test No. NJPCB-2

Appendix D. Tensile Failure Criteria

Note: Calculations are in English Units and results in English Units are converted to Metric Units.

1. Steel Strength of Anchor

$\mathbf{N_{sa} = \phi_s \times A_{se} \times f_{uta}}$ (17.4.1.2) [18]

where ϕ_s = 0.75, tensile strength reduction factor (17.3.3)

$\mathbf{A_{se}}$ = effective cross-sectional area of an anchor

$A_{se} = \frac{\pi}{4}(d_a - \frac{0.9743}{n_t})^2$,

where d_a = 1 in. , anchor diameter

n_t = 8, i.e. number of threads per inch

$\mathbf{f_{uta}}$ = tensile strength of anchor = 58,000 psi

58,000 – 80,000 psi range for ASTM A36 i.e. A307 Grade C [19]

N_{sa} = 26,350 lb (117.2 kN)

2. Concrete Breakout Strength of Anchor

$\mathbf{N_{cb} = \frac{A_{Nc}}{A_{Nco}} \times \psi_{ed,N} \times \psi_{c,N} \times \psi_{cp,N} \times N_b}$ (17.4.2.1a) [18]

where $\mathbf{A_{Nc}}$ = projected concrete failure area of a single anchor

if $s \geq 3h_{ef}$, $A_{Nc} = 9 \times h_{ef}^2$

if $s < 3h_{ef}$, $A_{Nc} = 3 \times h_{ef} \times s$

where s = 24 in. anchor spacing

h_{ef} = 7 in. embedment height

$\mathbf{A_{Nco}}$ = projected concrete failure area of a single anchor with an edge distance effects

$= 9 \times h_{ef}^2$ (17.4.2.1c)

$\mathbf{\psi_{ed,N}}$ = modification factor for edge effects for a single anchor

if $C_{a,min} \geq 1.5h_{ef}$, $\psi_{ed,N} = 1$ (17.4.2.5a)

if $C_{a,min} < 1.5h_{ef}$, $\psi_{ed,N} = 0.7 + 0.3\frac{C_{a,min}}{1.5h_{ef}}$ (17.4.2.5b)

$C_{a,min}$ = minimum edge distance, in this case there is no edge distance. Therefore, considering $C_{a,min}$ = 200 in.

$\mathbf{\psi_{c,N}}$ = modification factor for cracking (17.4.2.6)

if cast in anchors, $\psi_{c,N}$ = 1.25

if post-installed anchors, $\psi_{c,N}$ = 1.4

$\boldsymbol{\psi_{cp,N}}$ = modification factor for post-installed anchors (17.4.2.7)

if $C_{a,min} \geq C_{ac}$, $\psi_{cp,N} = 1$

if $C_{a,min} < C_{ac}$, $\psi_{cp,N} = \frac{C_{a,min}}{C_{ac}}$

where $C_{ac} = 2 \times h_{ef}$, for epoxy anchors (17.7.6)

$\mathbf{N_b} = k_c \times \lambda_a \times \sqrt{f'_c} \times h_{ef}^{1.5}$ (17.4.2.2a)

= basic concrete breakout strength of a single anchor

where $k_c = 17$, for post installed anchors

$\lambda_a = 1$, modification factor of light weight concrete

f'_c = 5,970 psi, concrete strength ranges from 5,970 - 7,040 psi as shown in Appendix C

$N_{cb} = \frac{9 \times h_{ef}^2}{9 \times h_{ef}^2} \times 1 \times 1.4 \times 1 \times (17 \times \sqrt{5{,}970} \times 7^{1.5})$

N_{cb} = 34,057 lb (151.5 kN)

Two conditions apply for factored load (17.3.3):

Condition A: **ϕ = 0.75,** assuming bridge installation

ϕN_{cb} = 25,543 lb (113.6 kN)

Condition B: **ϕ = 0.65,** assuming road installation

ϕN_{cb} = 22,137 lb (98.5 kN)

3. Bond Strength of Adhesive Anchor

$\mathbf{N_a} = \frac{\mathbf{A_{Na}}}{\mathbf{A_{Nao}}} \times \boldsymbol{\psi_{ed,Na}} \times \boldsymbol{\psi_{cp,Na}} \times \mathbf{N_{ba}}$ (17.4.5.1a) [18]

where $\mathbf{A_{Na}}$ = projected influence area of a single adhesive anchor

if $s \geq 2C_{Na}$, $A_{Na} = (2 \times C_{Na})^2$

if $s < 2C_{Na}$, $A_{Na} = 2 \times C_{Na} \times s$

where $C_{Na} = 10 \times d_a \times \sqrt{\frac{\tau}{1100}}$

$\tau = 1305 \times (\frac{f'_c}{2500})^{0.13}$ psi, bond strength [17]

A_{Nao} = projected influence area of a single adhesive anchor with an edge distance effects

$A_{Nao} = (2 \times C_{Na})^2$ (17.4.5.1c)

$\psi_{ed,Na}$ = modification factors for edge effects

if $C_{a,min} \geq C_{Na}$, $\psi_{ed,Na} = 1$ (17.4.5.4a)

if $C_{a,min} < C_{Na}$, $\psi_{ed,Na} = 0.7 + 0.3\frac{C_{a,min}}{C_{Na}}$ (17.4.5.4b)

$\psi_{cp,Na}$ = modification factors for adhesive anchors designed for uncracked concrete

if $C_{a,min} \geq C_{ac}$, $\psi_{cp,Na} = 1$ (17.4.5.5a)

if $C_{a,min} < C_{ac}$, $\psi_{cp,Na} = \frac{C_{a,min}}{C_{ac}}$ (17.4.5.5b)

N_{ba} = $\tau \times \pi \times d_a \times h_{ef}$ (17.4.5.2)

= basic bond strength of a single adhesive anchor

$N_a = \frac{(2C_{Na})^2}{(2C_{Na})^2} \times 1 \times 1 \times \{1305 \times (\frac{f'_c}{2500})^{0.13} \times \pi \times 1 \times 7\}$

N_a = 32,137 lb (143.0 kN)

Two conditions apply for factored load (17.3.3):

Condition A: **ϕ = 0.75,** assuming bridge installation

ϕN_a = 24,103 lb (107.2 kN)

Condition B: **ϕ = 0.65,** assuming road installation

ϕN_a = 20,889 lb (92.9 kN)

Appendix E. Vehicle Center of Gravity Determination

Test: NJPCB-2 Vehicle: Dodge Ram 1500

Vehicle CG Determination

VEHICLE	Equipment	Weight (lb.)	Vertical CG (in.)	Vertical M (lb-in.)
+	Unbalasted Truck (Curb)	5253	28.21482	148212.47
+	Hub	19	15	285
+	Brake activation cylinder & frame	7	27.5	192.5
+	Pneumatic tank (Nitrogen)	22	26.75	588.5
+	Strobe/Brake Battery	5	25.25	126.25
+	Brake Reciever/Wires	5	51 5/8	258.125
+	CG Plate including DAS	50	29 5/8	1481.25
-	Battery	-48	39.125	-1878
-	Oil	-12	28.75	-345
-	Interior	-116	26.875	-3117.5
-	Fuel	-156	18.25	-2847
-	Coolant	-16	33.25	-532
-	Washer fluid	-8	34.5	-276
+	Water Ballast	0	0	0
+	Onboard Battery	14	25.5	357
				0
				142505.59

Note: (+) is added equipment to vehicle, (-) is removed equipment from vehicle

Estimated Total Weight (lb.)	5019
Vertical CG Location (in.)	28.39322

Wheel Base (in.) 140.375

Center of Gravity	2270P MASH Targets	Test Inertial	Difference
Test Inertial Weight (lb.)	5000 ± 110	4992	-8.0
Longitudinal CG (in.)	63 ± 4	61.05	-1.95150
Lateral CG (in.)	NA	0.758614	NA
Vertical CG (in.)	28 or greater	28.39	0.39322

Note: Long. CG is measured from front axle of test vehicle

Note: Lateral CG measured from centerline - positive to vehicle right (passenger) side

CURB WEIGHT (lb.)

	Left	Right
Front	1504	1175
Rear	1443	1131
FRONT	2679 lb.	
REAR	2574 lb.	
TOTAL	5253 lb.	

TEST INERTIAL WEIGHT (lb.)

	Left	Right
Front	1399	1422
Rear	1041	1130
FRONT	2821 lb.	
REAR	2171 lb.	
TOTAL	4992 lb.	

Figure E-1. Vehicle Mass Distribution, Test No. NJPCB-2

Appendix F. Vehicle Deformation Records

VEHICLE PRE/POST CRUSH
FLOORPAN - SET 1

TEST: NJPCB-2
VEHICLE: Dodge Ram 1500

POINT	X (in.)	Y (in.)	Z (in.)	X' (in.)	Y' (in.)	Z' (in.)	ΔX (in.)	ΔY (in.)	ΔZ (in.)	Total Δ (in.)	Crush (in.)
1	29.583	-27.165	3.982	27.440	-25.701	5.427	-2.143	1.463	1.445	2.970	2.585
2	31.500	-23.036	2.214	26.740	-21.130	5.118	-4.760	1.906	2.904	5.893	5.576
3	31.960	-19.054	1.504	27.420	-15.150	4.410	-4.540	3.904	2.906	6.655	5.390
4	31.793	-14.104	2.093	29.370	-12.710	2.460	-2.423	1.394	0.367	2.819	2.451
5	27.579	-27.813	0.709	26.316	-26.321	1.719	-1.263	1.492	1.010	2.200	1.617
6	28.177	-23.657	0.006	25.810	-21.710	1.790	-2.367	1.947	1.784	3.546	2.964
7	28.173	-19.372	-0.470	26.090	-17.320	1.100	-2.083	2.052	1.570	3.318	2.608
8	28.130	-14.911	-0.863	27.780	-13.700	-0.266	-0.350	1.211	0.597	1.394	0.692
9	25.371	-28.086	-0.972	25.240	-26.590	-0.537	-0.131	1.496	0.435	1.564	0.435
10	25.552	-23.862	-1.245	24.863	-22.070	-1.064	-0.689	1.792	0.181	1.929	0.181
11	25.681	-19.776	-1.765	24.786	-18.029	-1.517	-0.895	1.747	0.248	1.978	0.248
12	25.670	-15.348	-2.274	25.648	-14.081	-2.754	-0.022	1.267	-0.480	1.355	-0.480
13	22.547	-28.095	-2.228	22.357	-26.841	-1.804	-0.190	1.254	0.424	1.337	0.424
14	22.776	-23.949	-2.830	22.557	-22.813	-2.637	-0.219	1.135	0.193	1.172	0.193
15	22.901	-19.919	-3.213	22.710	-18.866	-3.262	-0.191	1.053	-0.049	1.071	-0.049
16	22.957	-15.833	-3.665	22.882	-14.796	-3.971	-0.076	1.037	-0.306	1.084	-0.306
17	16.923	-27.879	-3.288	17.225	-27.087	-3.889	0.301	0.793	-0.601	1.040	-0.601
18	16.939	-23.788	-3.752	17.144	-22.930	-4.177	0.204	0.858	-0.426	0.979	-0.426
19	17.011	-19.411	-4.247	17.109	-18.667	-4.594	0.098	0.744	-0.347	0.827	-0.347
20	16.879	-15.784	-4.663	16.898	-14.899	-4.976	0.019	0.885	-0.313	0.939	-0.313
21	9.919	-27.920	-3.573	10.062	-27.267	-4.136	0.143	0.653	-0.562	0.873	-0.562
22	9.817	-23.575	-3.984	10.185	-23.111	-4.419	0.369	0.464	-0.435	0.735	-0.435
23	9.790	-19.570	-4.498	9.822	-18.936	-4.792	0.032	0.634	-0.294	0.699	-0.294
24	9.936	-15.778	-4.928	9.842	-15.139	-5.103	-0.094	0.639	-0.175	0.669	-0.175
25	1.005	-26.839	0.339	1.526	-26.480	0.314	0.521	0.359	-0.025	0.633	-0.025
26	0.731	-23.016	-0.098	1.166	-22.683	-0.112	0.435	0.334	-0.014	0.548	-0.014
27	0.767	-18.901	-0.600	0.988	-18.406	-0.613	0.222	0.495	-0.013	0.542	-0.013
28	0.607	-15.405	-0.975	0.761	-14.964	-1.014	0.154	0.441	-0.039	0.469	-0.039

Note: Crush column is deformation perpendicular to the plane area of interest

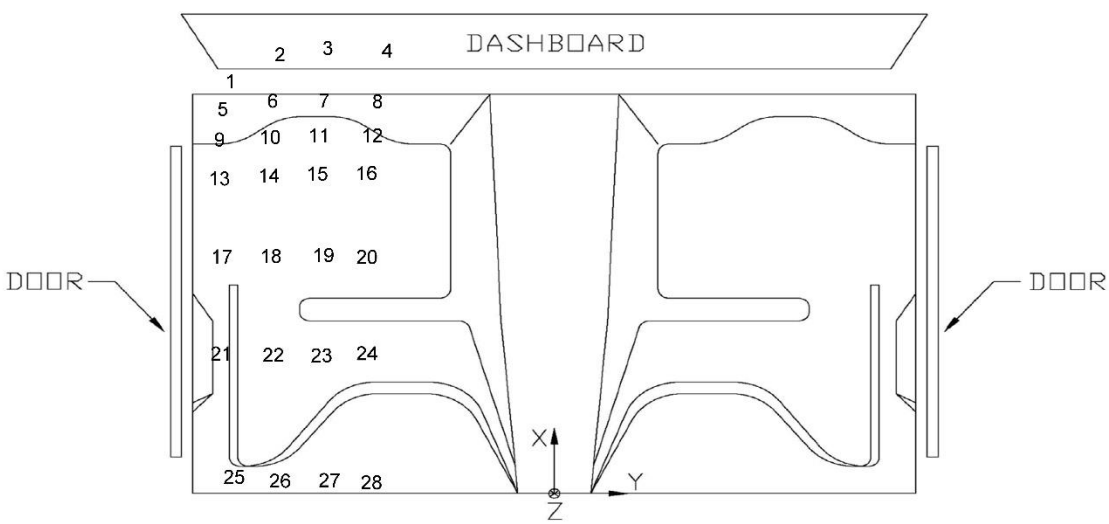

Figure F-1. Floor Pan Deformation Data – Set 1, Test No. NJPCB-2

VEHICLE PRE/POST CRUSH
INTERIOR CRUSH - SET 1

TEST: NJPCB-2
VEHICLE: Dodge Ram 1500

	POINT	X (in.)	Y (in.)	Z (in.)	X' (in.)	Y' (in.)	Z' (in.)	ΔX (in.)	ΔY (in.)	ΔZ (in.)	Total Δ (in.)	Crush (in.)
DASH	1	16.552	-25.388	28.389	16.965	-24.914	28.484	0.413	0.474	0.096	0.636	0.636
	2	13.600	-15.304	30.205	13.902	-14.709	30.215	0.302	0.595	0.010	0.667	0.667
	3	12.118	2.641	25.289	12.384	3.238	25.085	0.265	0.597	-0.204	0.684	0.684
	4	13.447	-25.561	20.243	13.869	-25.058	20.465	0.421	0.502	0.223	0.692	0.692
	5	11.622	-11.769	17.305	11.904	-11.179	17.371	0.282	0.590	0.066	0.657	0.657
	6	9.262	1.855	16.045	9.420	2.177	15.952	0.158	0.322	-0.093	0.370	0.370
SIDE PANEL	7	23.934	-31.741	8.288	24.432	-30.149	8.215	0.499	1.592	-0.073	1.670	1.592
	8	23.847	-31.928	6.472	24.326	-30.249	6.305	0.478	1.679	-0.166	1.754	1.679
	9	23.637	-32.082	3.897	24.085	-30.348	3.814	0.448	1.734	-0.083	1.793	1.734
IMPACT SIDE DOOR	10	-9.833	-33.251	18.535	-9.485	-38.110	19.004	0.348	-4.859	0.469	4.894	-4.859
	11	-1.685	-33.075	18.882	-1.561	-36.944	19.303	0.125	-3.870	0.422	3.894	-3.870
	12	11.542	-32.863	18.792	11.471	-34.527	19.150	-0.071	-1.664	0.358	1.703	-1.664
	13	-9.392	-34.181	9.924	-9.041	-38.288	10.263	0.352	-4.108	0.338	4.136	-4.108
	14	-1.048	-34.735	9.701	-0.724	-37.462	10.008	0.325	-2.727	0.308	2.763	-2.727
	15	7.809	-34.582	5.549	7.952	-35.040	5.923	0.143	-0.458	0.374	0.609	-0.458
ROOF	1	5.065	-16.404	43.034	5.515	-15.886	43.015	0.451	0.518	-0.019	0.687	-0.019
	2	6.494	-10.490	42.607	6.893	-9.832	42.494	0.399	0.658	-0.113	0.778	-0.113
	3	7.513	-4.508	42.051	7.867	-4.010	41.838	0.354	0.498	-0.212	0.647	-0.212
	4	7.818	0.108	41.643	8.045	0.782	41.237	0.226	0.674	-0.406	0.819	-0.406
	5	8.165	3.818	41.171	8.244	4.326	40.925	0.079	0.508	-0.246	0.570	-0.246
	6	-4.643	-15.145	46.311	-4.041	-14.598	46.327	0.601	0.547	0.017	0.813	0.017
	7	-4.324	-9.313	45.987	-3.635	-8.804	45.897	0.689	0.508	-0.090	0.861	-0.090
	8	-4.413	-3.848	45.634	-3.977	-3.293	45.475	0.436	0.556	-0.159	0.724	-0.159
	9	-4.229	0.783	45.277	-3.959	1.235	45.062	0.270	0.451	-0.215	0.568	-0.215
	10	-4.359	3.935	44.974	-3.943	4.473	44.678	0.417	0.538	-0.297	0.742	-0.297
	11	-12.770	-14.809	46.932	-12.191	-14.234	47.015	0.579	0.575	0.082	0.820	0.082
	12	-12.538	-9.226	46.643	-11.946	-8.776	46.630	0.592	0.450	-0.014	0.744	-0.014
	13	-12.354	-4.753	46.320	-11.825	-4.228	46.235	0.528	0.525	-0.085	0.749	-0.085
	14	-12.033	-0.615	45.974	-11.652	-0.128	45.813	0.381	0.487	-0.161	0.639	-0.161
	15	-12.195	2.918	45.644	-11.653	3.479	45.395	0.542	0.561	-0.249	0.818	-0.249

Note: Crush column is deformation perpendicular to the plane area of interest

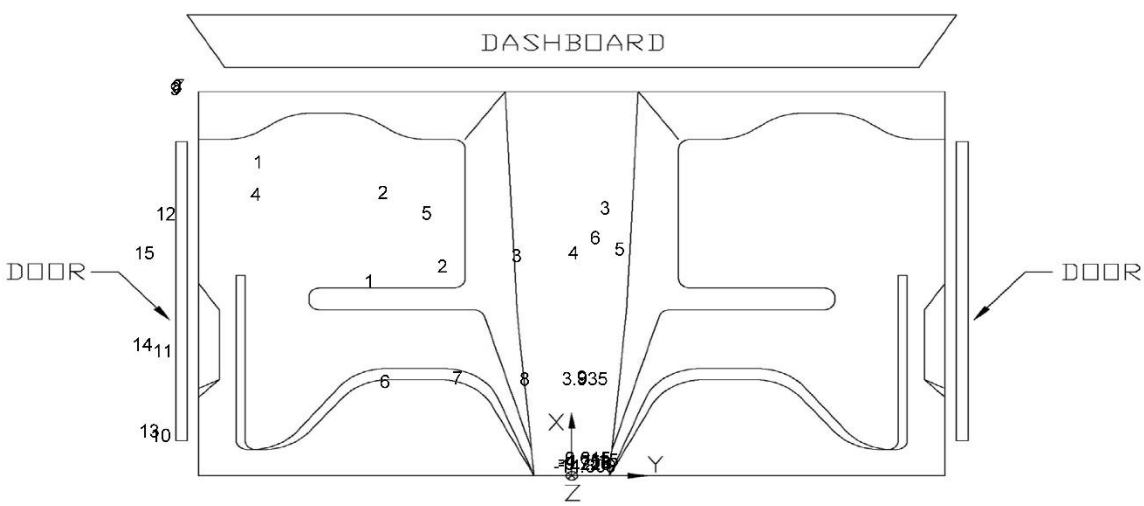

Figure F-2. Occupant Compartment Deformation Data – Set 1, Test No. NJPCB-2

Date: 4/21/2016 **Test Number:** NJPCB-2

Make: Dodge **Model:** Ram 1500 **Year:** 2011

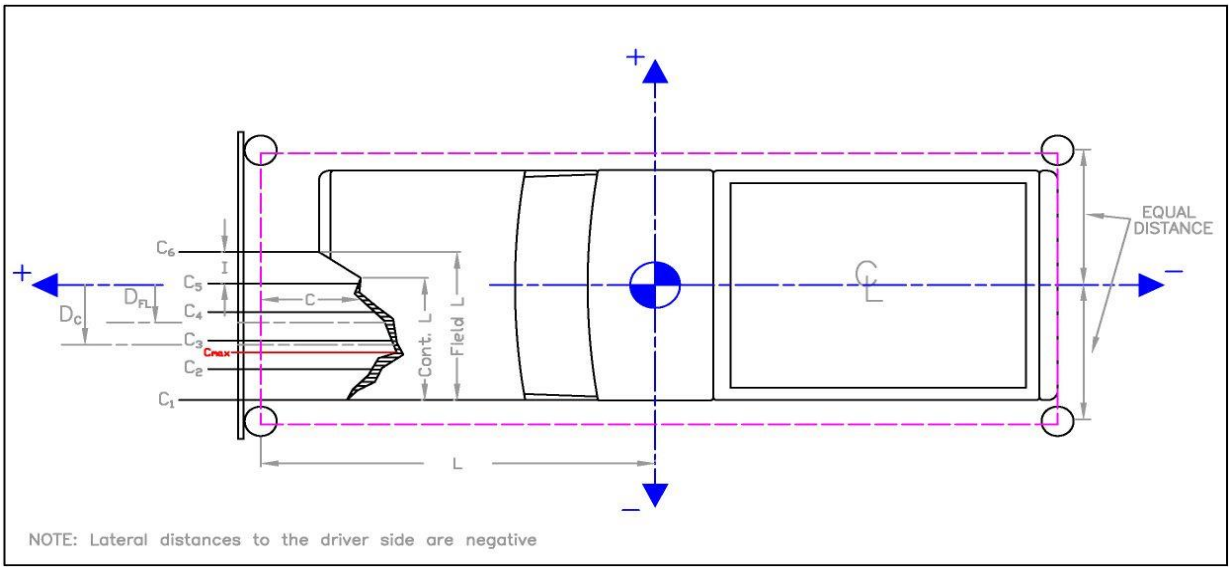

Blue Cells to be filled out Before Test
Orange Cells to Be filled out After Test

	in.	(mm)
Distance from C.G. to reference line - L_{REF}:	112 1/4	(2851)
Total Vehicle Width:	76 7/8	(1953)
Width of contact and induced crush - Field L:	76 7/8	(1953)
Crush measurement spacing interval (L/5) - I:	15 3/8	(391)
Distance from center of vehicle to center of Field L - D_{FL}:	0	()
Width of Contact Damage:	38 4/9	(976)
Distance from center of vehicle to center of contact damage - D_C:	-19 2/9	-(488)

NOTE: Enter "NA" for crush measurement if distance can not be measured (i.e., side of vehicle has been pushed inward)
NOTE: All values must be filled out above before crush measurements are filled out.

	Crush Measurement		Lateral Location		Original Profile Measurement		Dist. Between Ref. Lines		Actual Crush	
	in.	(mm)	in.	(mm)	in.	(mm)	in.	(mm)	in.	(mm)
C_1	NA	NA	-38 4/9	-(976)	22 1/2	(572)	7	(180)	NA	NA
C_2	21	(533)	-23	-(586)	6 5/9	(166)			7 3/8	(187)
C_3	7 1/2	(191)	-7 2/3	-(195)	4 1/4	(108)			-3 4/5	-(97)
C_4	8 3/4	(222)	7 2/3	(195)	4 2/9	(107)			-2 1/2	-(65)
C_5	12 1/4	(311)	23	(586)	6 1/8	(156)			-1	-(24)
C_6	NA	NA	38 4/9	(976)	20 1/2	(521)			NA	NA
C_{MAX}	32	(813)	-21	-(533)	5 4/5	(148)			19 1/9	(485)

Figure F-3. Exterior Vehicle Crush (NASS) - Front, Test No. NJPCB-2

Date: 4/21/2016 **Test Number:** NJPCB-2

Make: Dodge **Model:** Ram 1500 **Year:** 2011

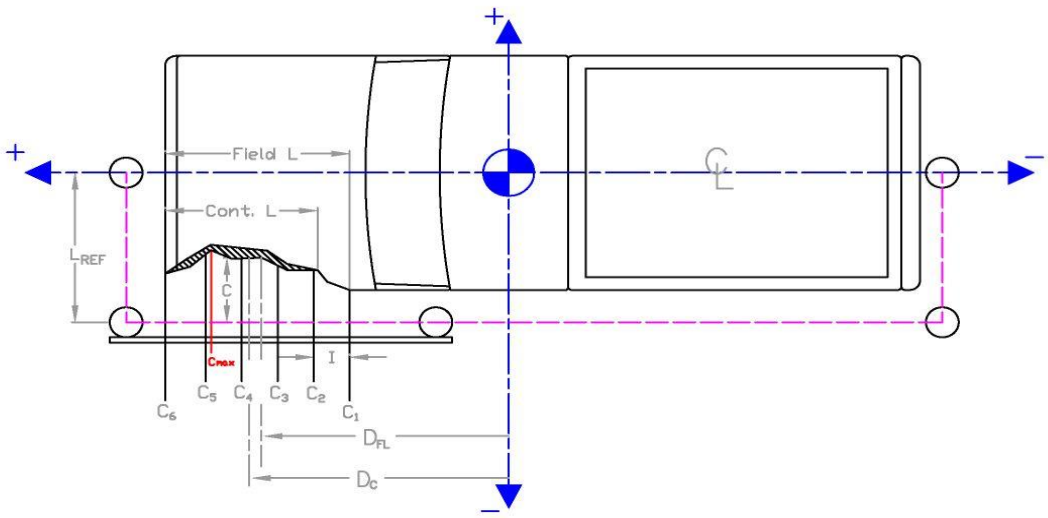

Blue Cells to be filled out Before Test
Orange Cells to Be filled out After Test

	in.	(mm)
Distance from centerline to reference line - L_{REF}:	48	(1219)
Total Vehicle Length:	229 1/8	(5820)
Width of contact and induced crush - Field L:	229 1/8	(5820)
Crush measurement spacing interval (L/5) - I:	45 7/8	(1164)
Distance from vehicle c.g. to center of Field L - D_{FL}:	-10 1/4	-(261)
Width of Contact Damage:	229 1/8	(5820)
Distance from vehicle c.g. to center of contact damage - D_C:	-10 1/4	-(261)

NOTE: Enter "NA" for crush measurement if distance can not be measured (i.e., front of vehicle has been pushed inward or tire has been removed)
NOTE: All values must be filled out above before crush measurements are filled out.

	Crush Measurement		Longitudinal Location		Original Profile Measurement		Dist. Between Ref. Lines		Actual Crush	
	in.	(mm)	in.	(mm)	in.	(mm)	in.	(mm)	in.	(mm)
C_1	NA	NA	-124 5/6	-(3171)	33 1/2	(851)	4	(102)	NA	NA
C_2	NA	NA	-79	-(2007)	5 1/4	(133)			NA	NA
C_3	5 1/4	(133)	-33 1/6	-(843)	5 1/2	(140)			-4 2/7	-(109)
C_4	5 3/4	(146)	12 2/3	(321)	5 1/8	(130)			-3 3/8	-(86)
C_5	NA	NA	58 1/2	(1485)	5	(127)			NA	NA
C_6	NA	NA	104 2/7	(2649)	33 1/2	(851)			NA	NA
C_{MAX}	25 1/2	(648)	86	(2184)	6	(154)			15 4/9	(392)

Figure F-4. Exterior Vehicle Crush (NASS) - Side, Test No. NJPCB-2

Appendix G. Accelerometer and Rate Transducer Data Plots, Test No. NJPCB-2

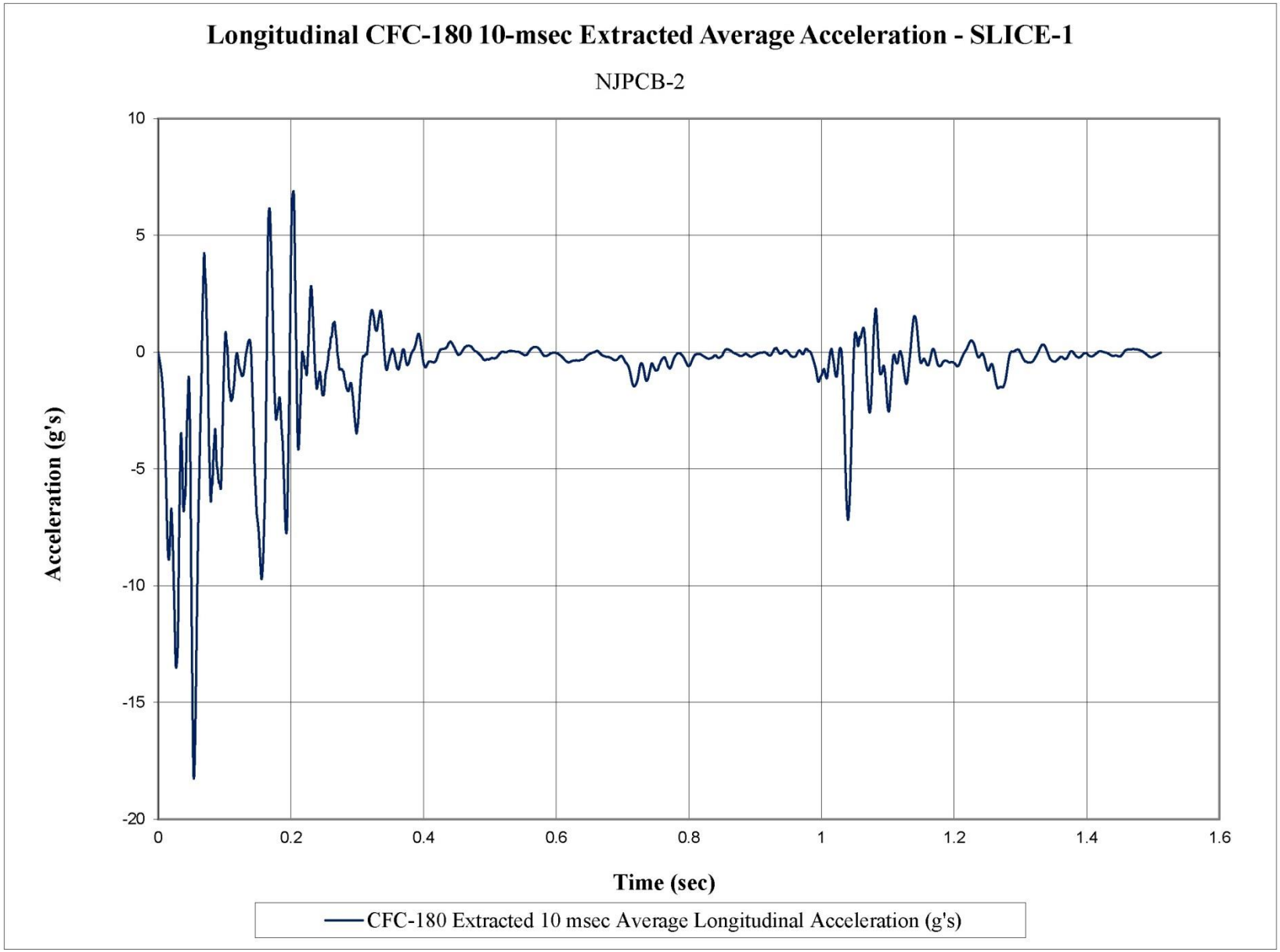

Figure G-1. 10-ms Average Longitudinal Deceleration (SLICE-1), Test No. NJPCB-2

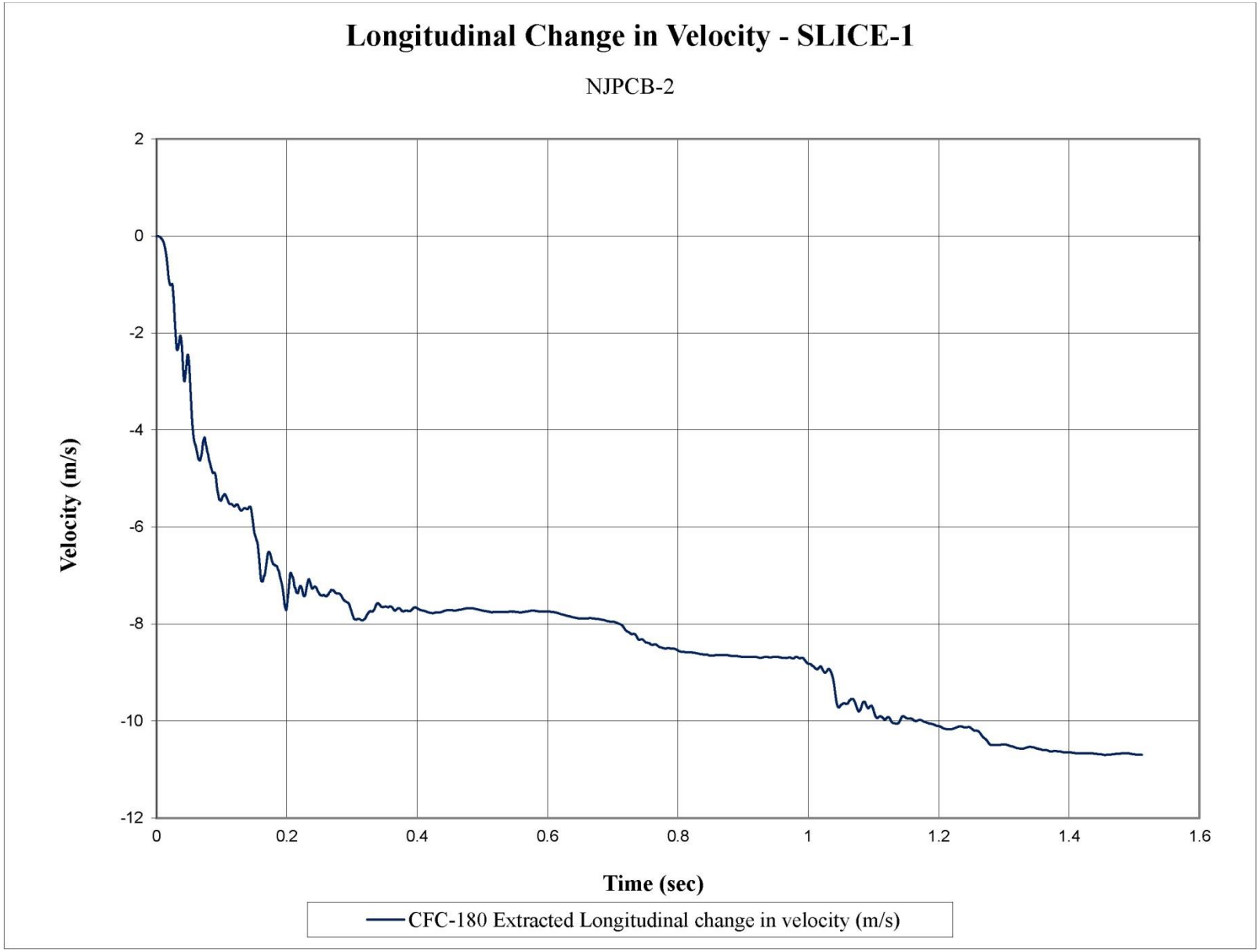

Figure G-2. Longitudinal Occupant Impact Velocity (SLICE-1), Test No. NJPCB-2

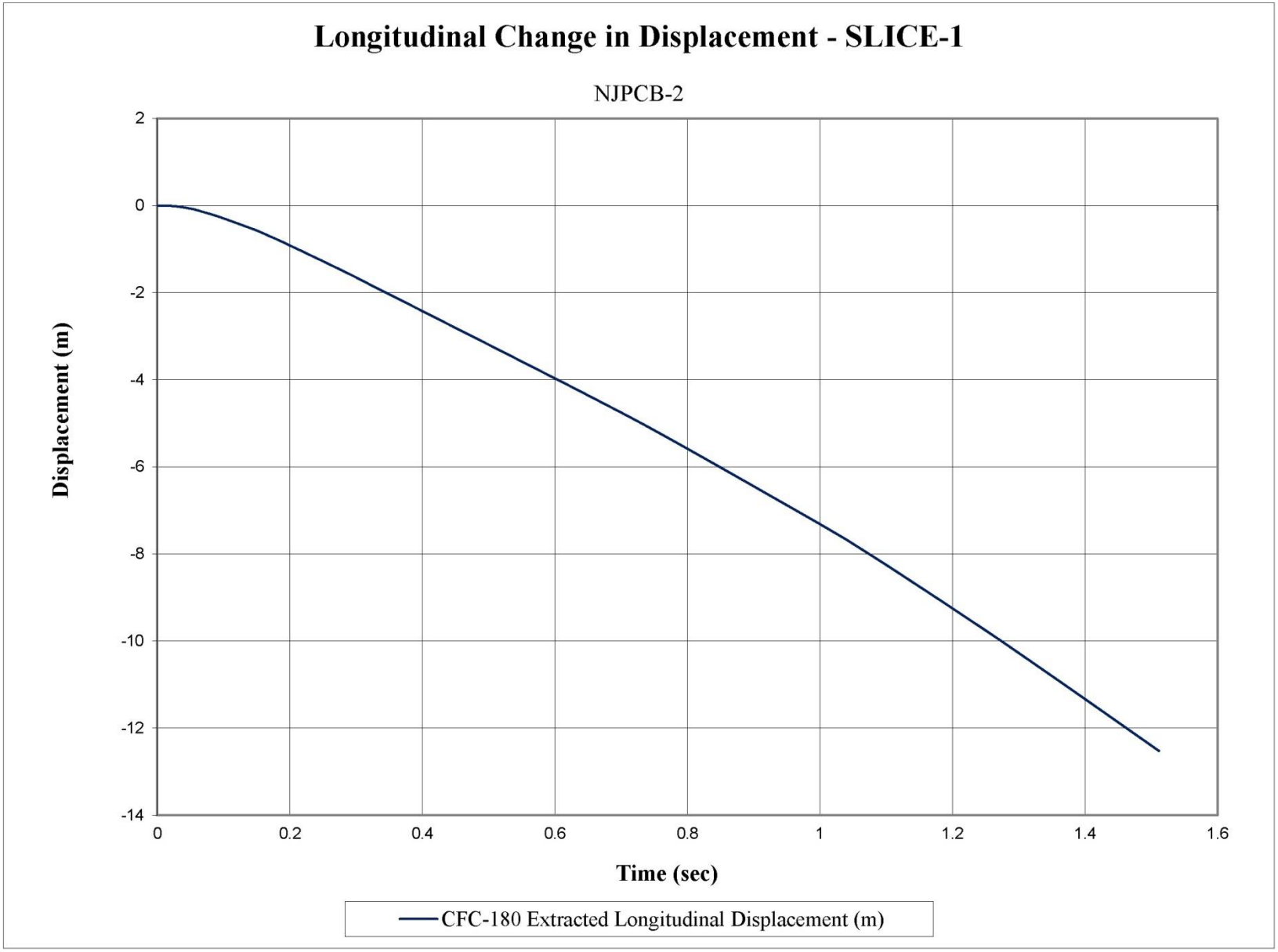

Figure G-3. Longitudinal Occupant Displacement (SLICE-1), Test No. NJPCB-2

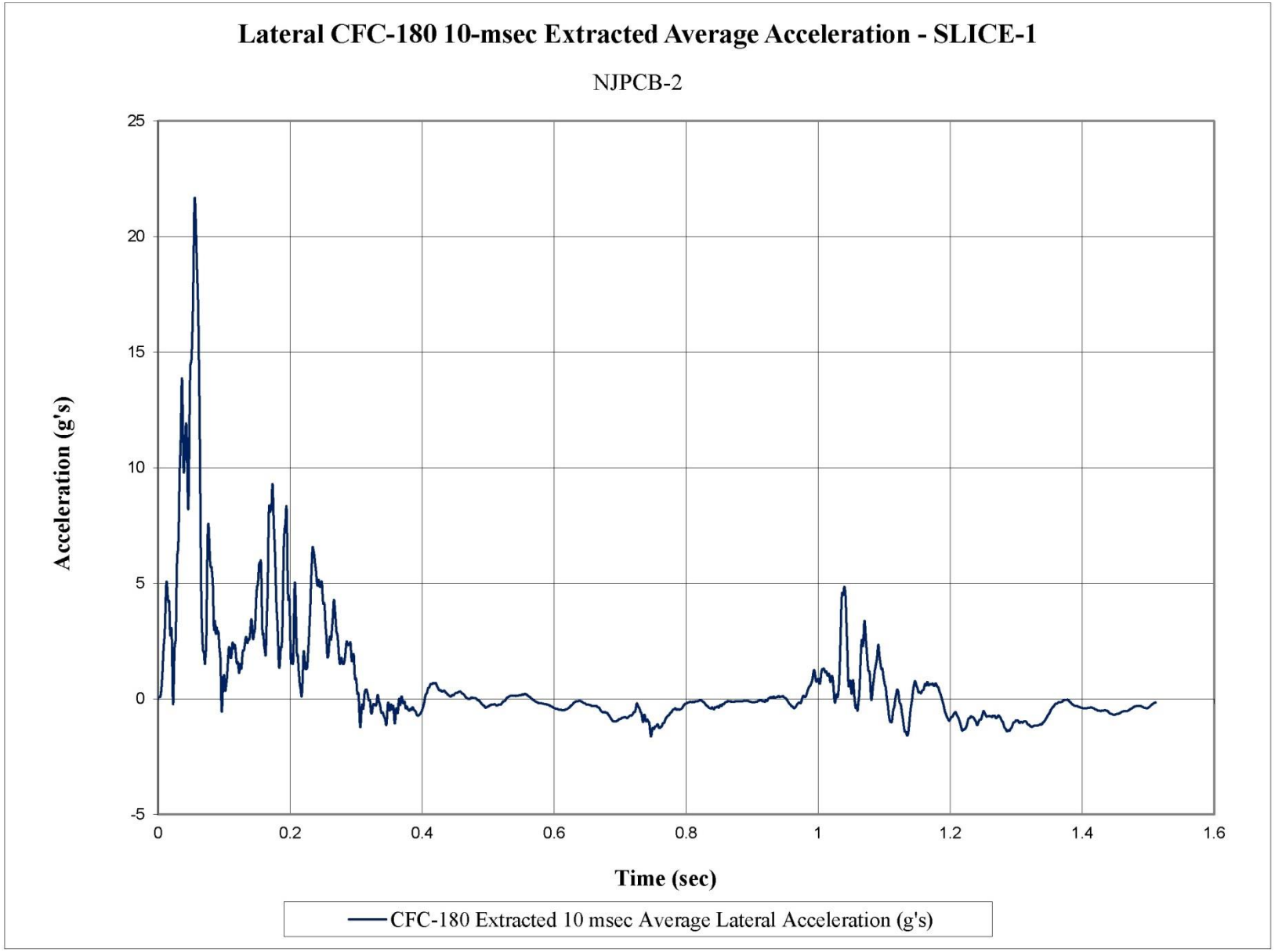

Figure G-4. 10-ms Average Lateral Deceleration (SLICE-1), Test No. NJPCB-2

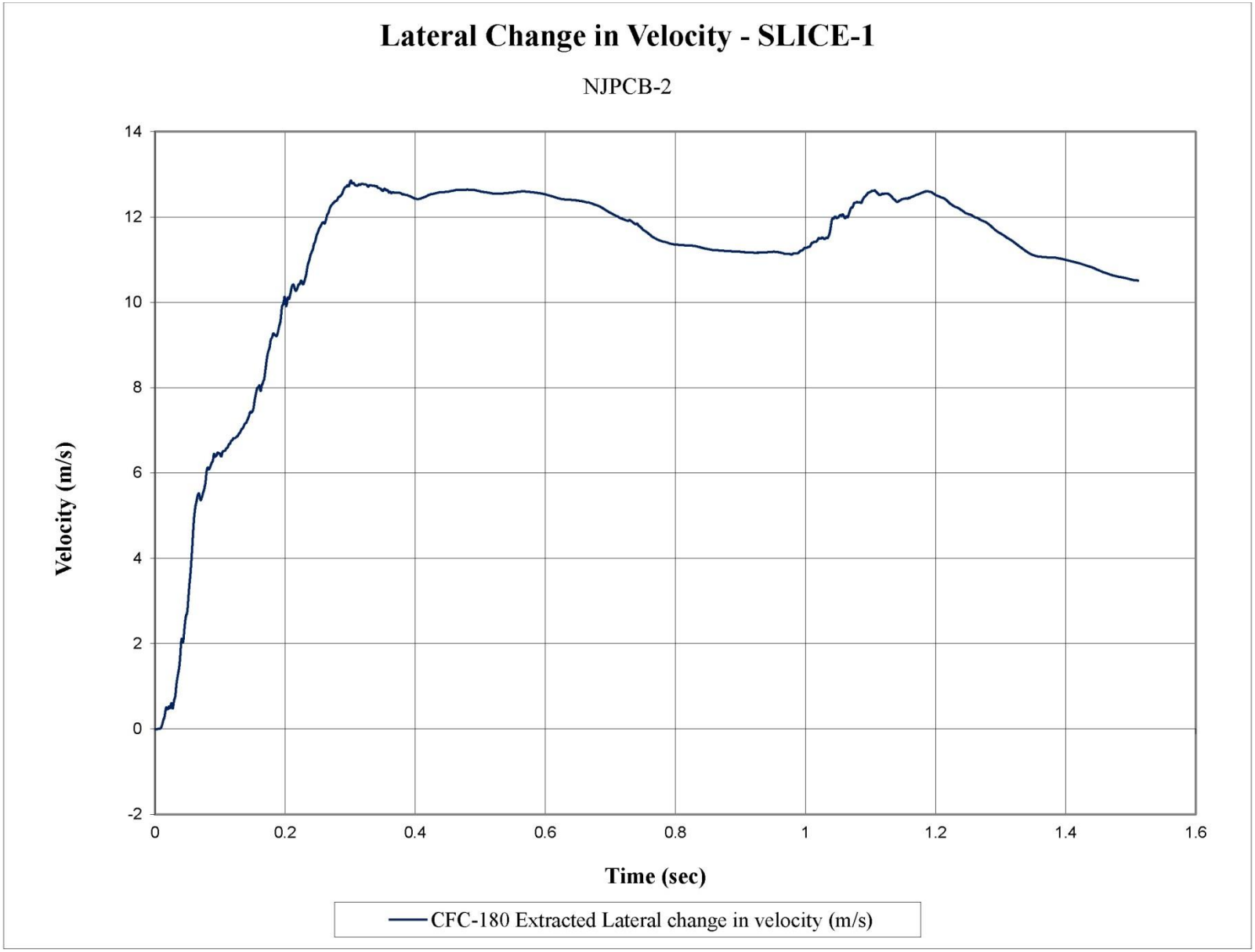

Figure G-5. Lateral Occupant Impact Velocity (SLICE-1), Test No. NJPCB-2

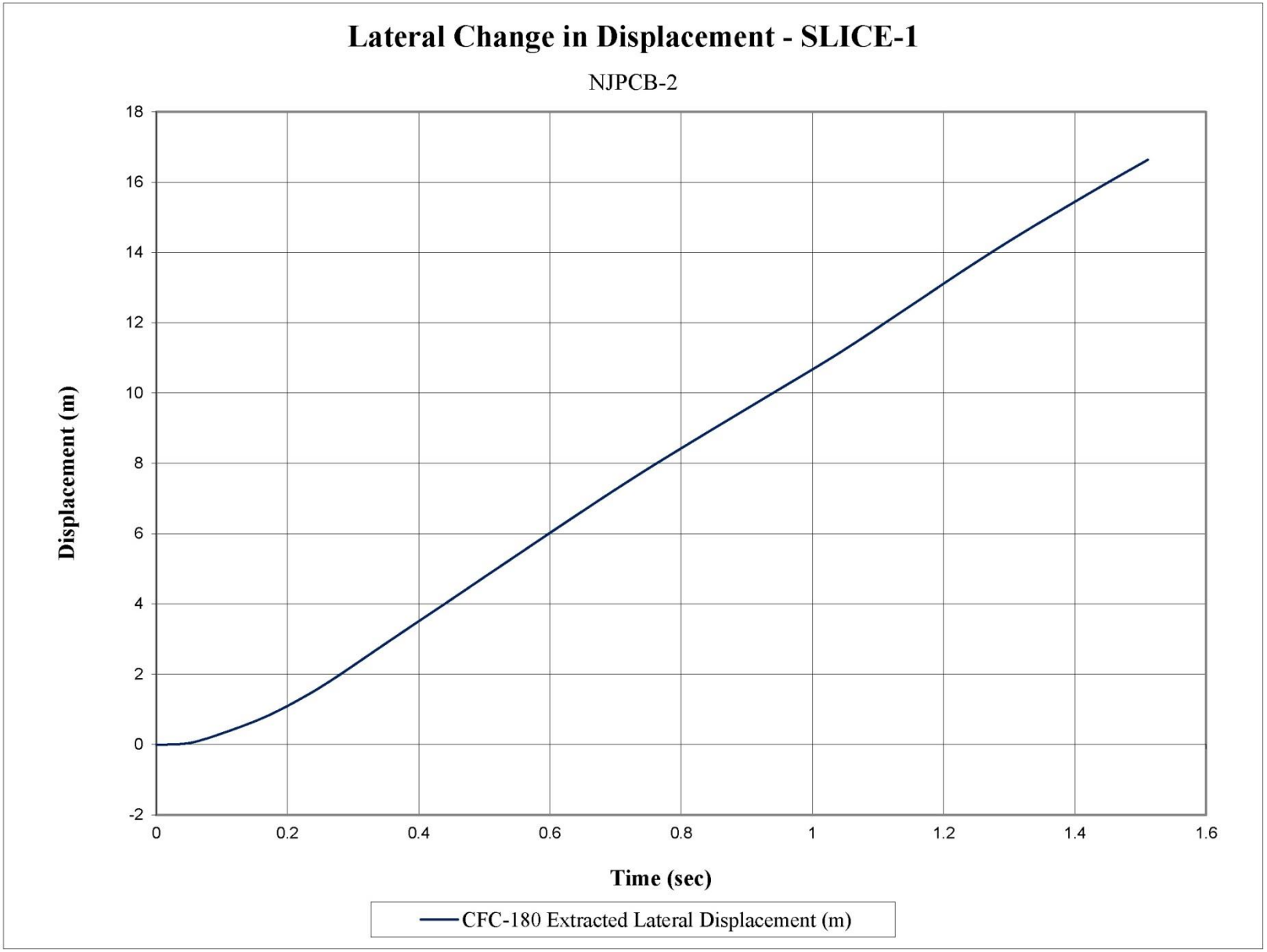

Figure G-6. Lateral Occupant Displacement (SLICE-1), Test No. NJPCB-2

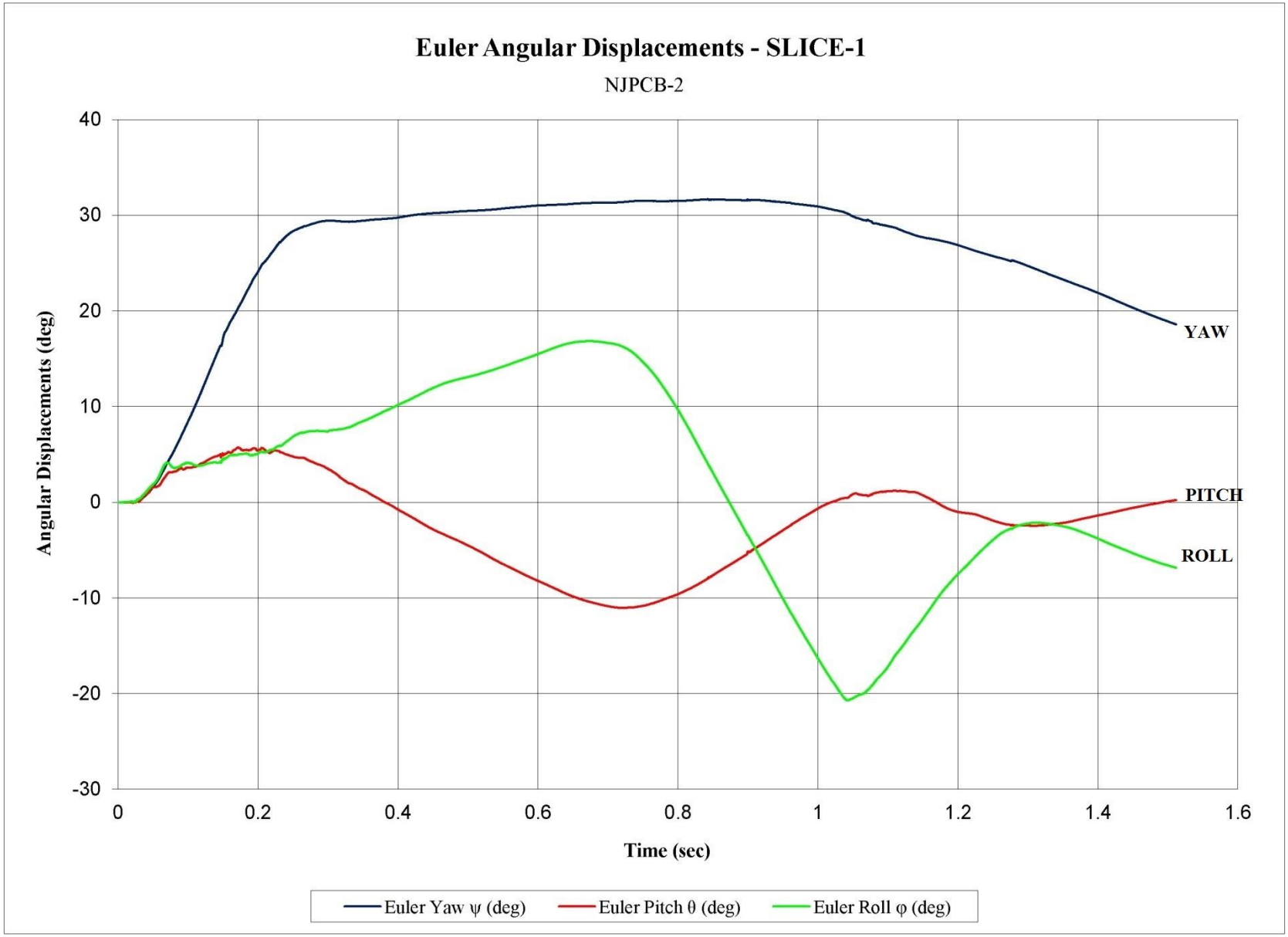

Figure G-7. Vehicle Angular Displacements (SLICE-1), Test No. NJPCB-2

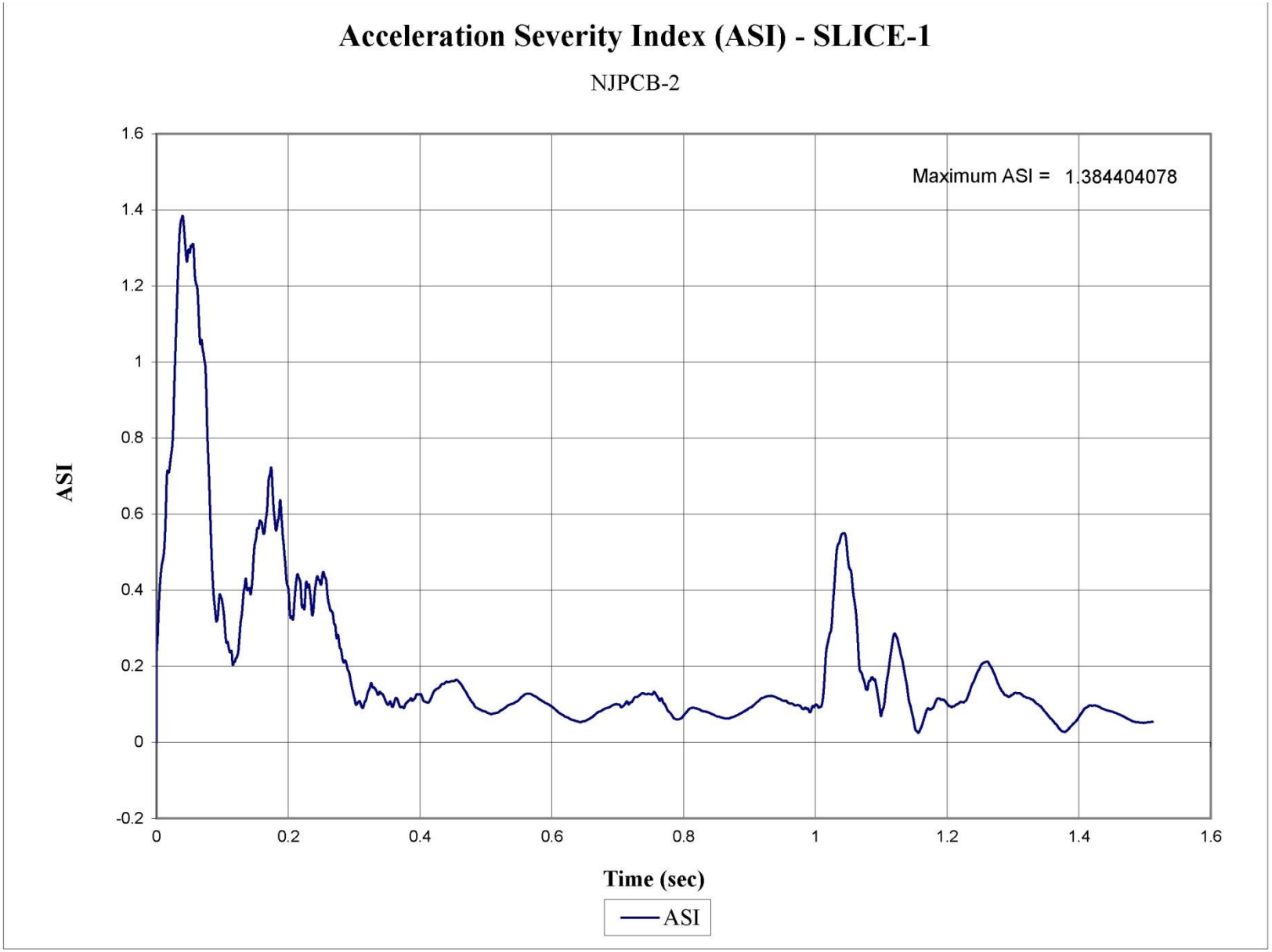

Figure G-8. Acceleration Severity Index (SLICE-1), Test No. NJPCB-2

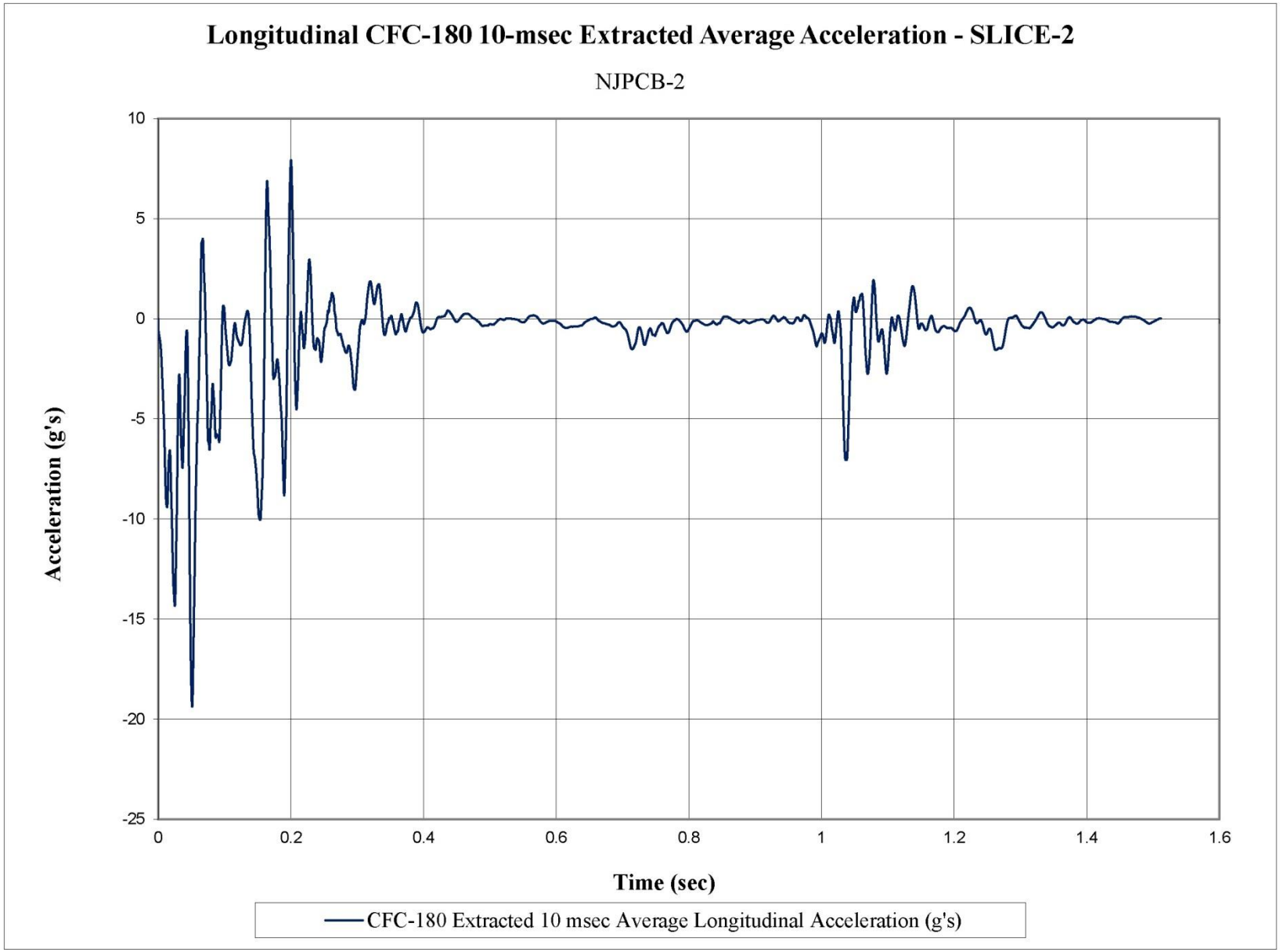

Figure G-9. 10-ms Average Longitudinal Deceleration (SLICE-2), Test No. NJPCB-2

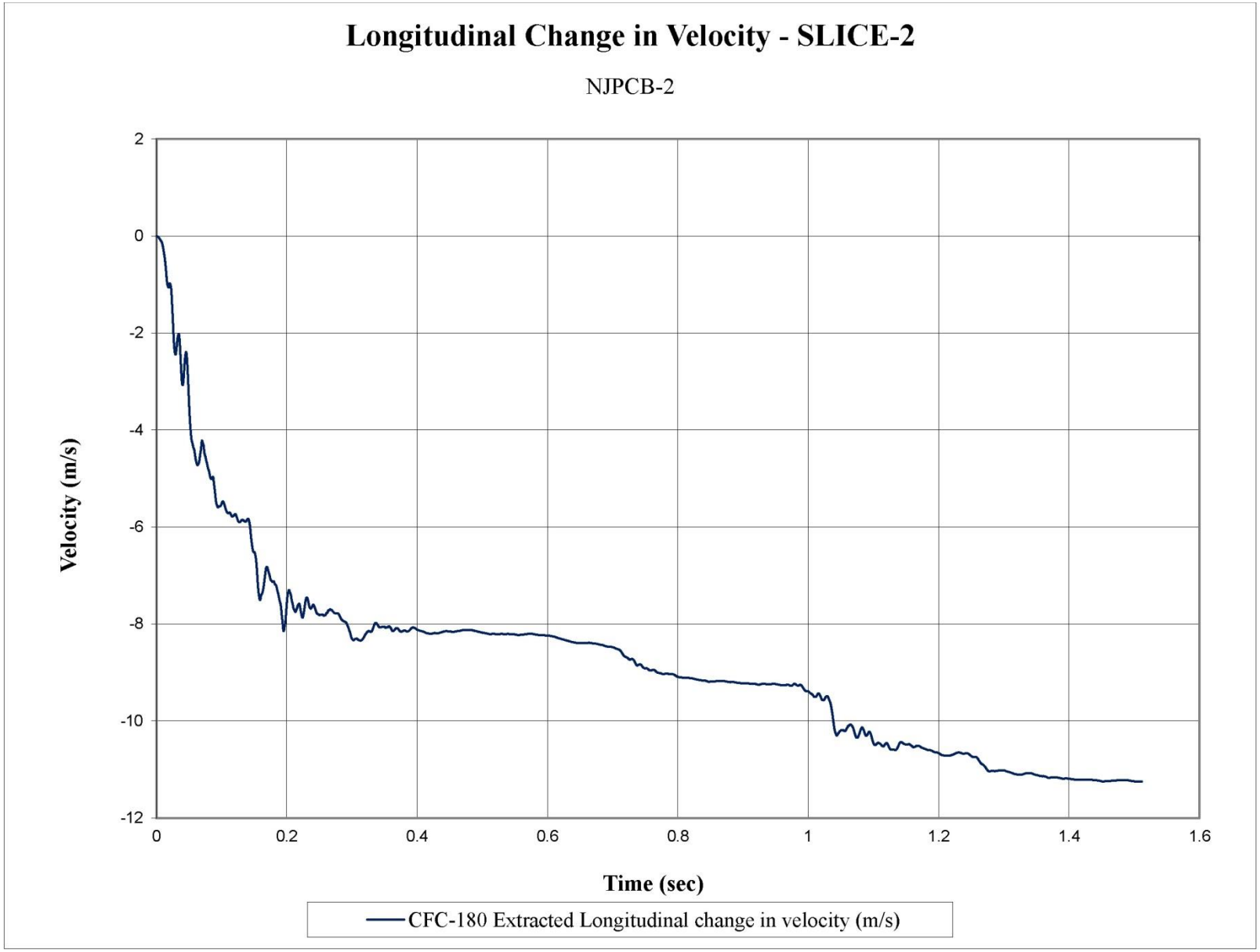

Figure G-10. Longitudinal Occupant Impact Velocity (SLICE-2), Test No. NJPCB-2

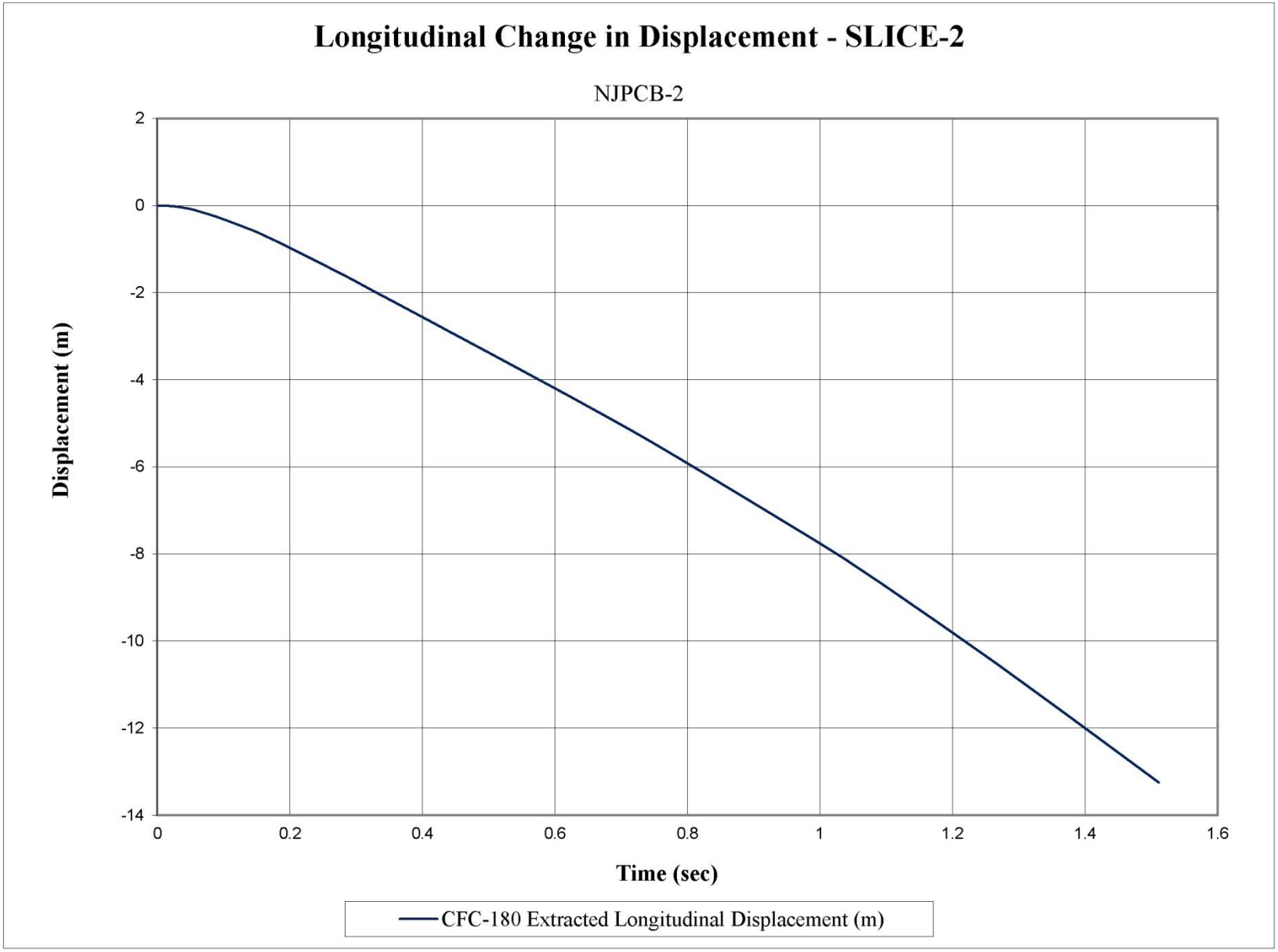

Figure G-11. Longitudinal Occupant Displacement (SLICE-2), Test No. NJPCB-2

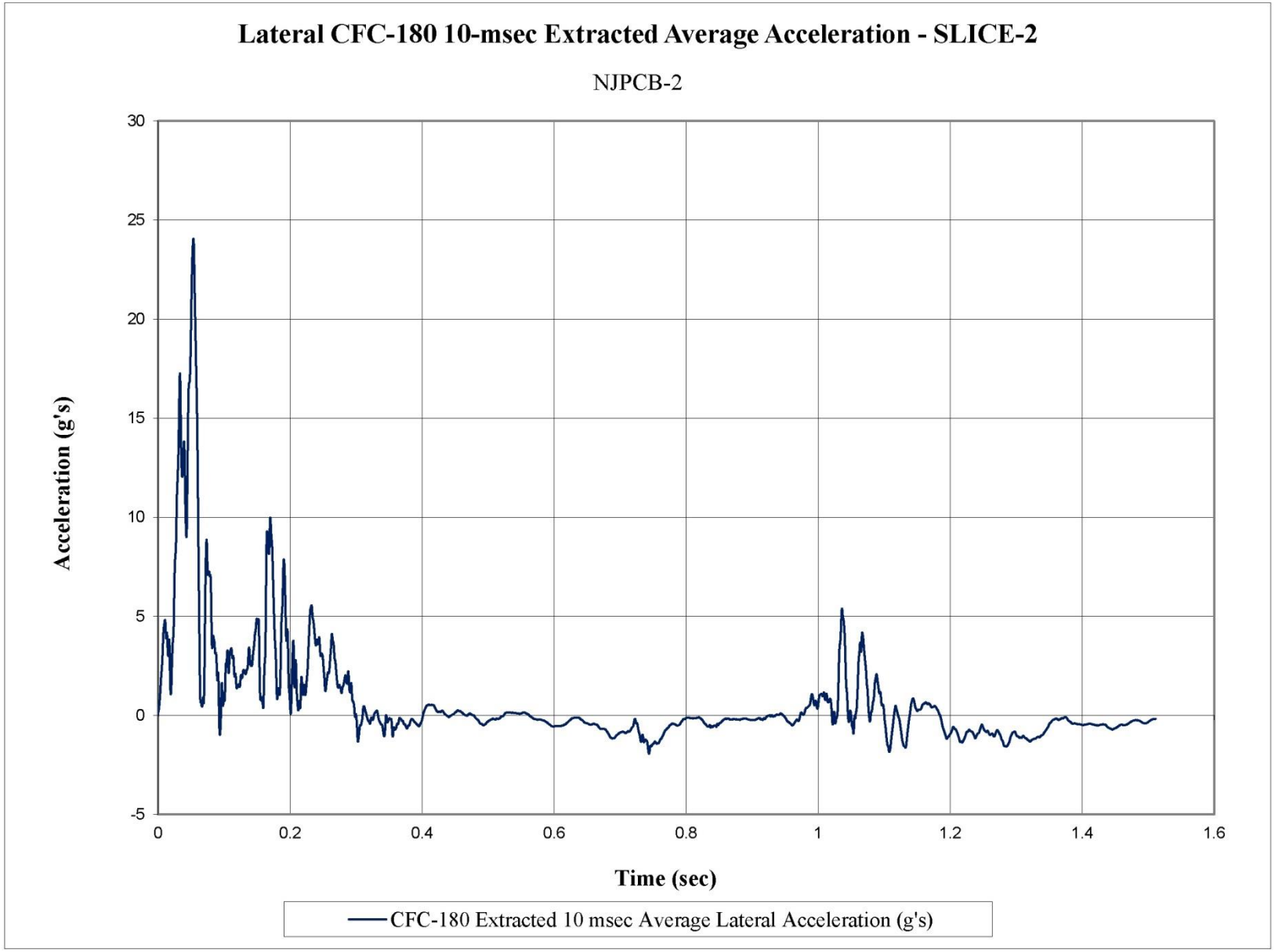

Figure G-12. 10-ms Average Lateral Deceleration (SLICE-2), Test No. NJPCB-2

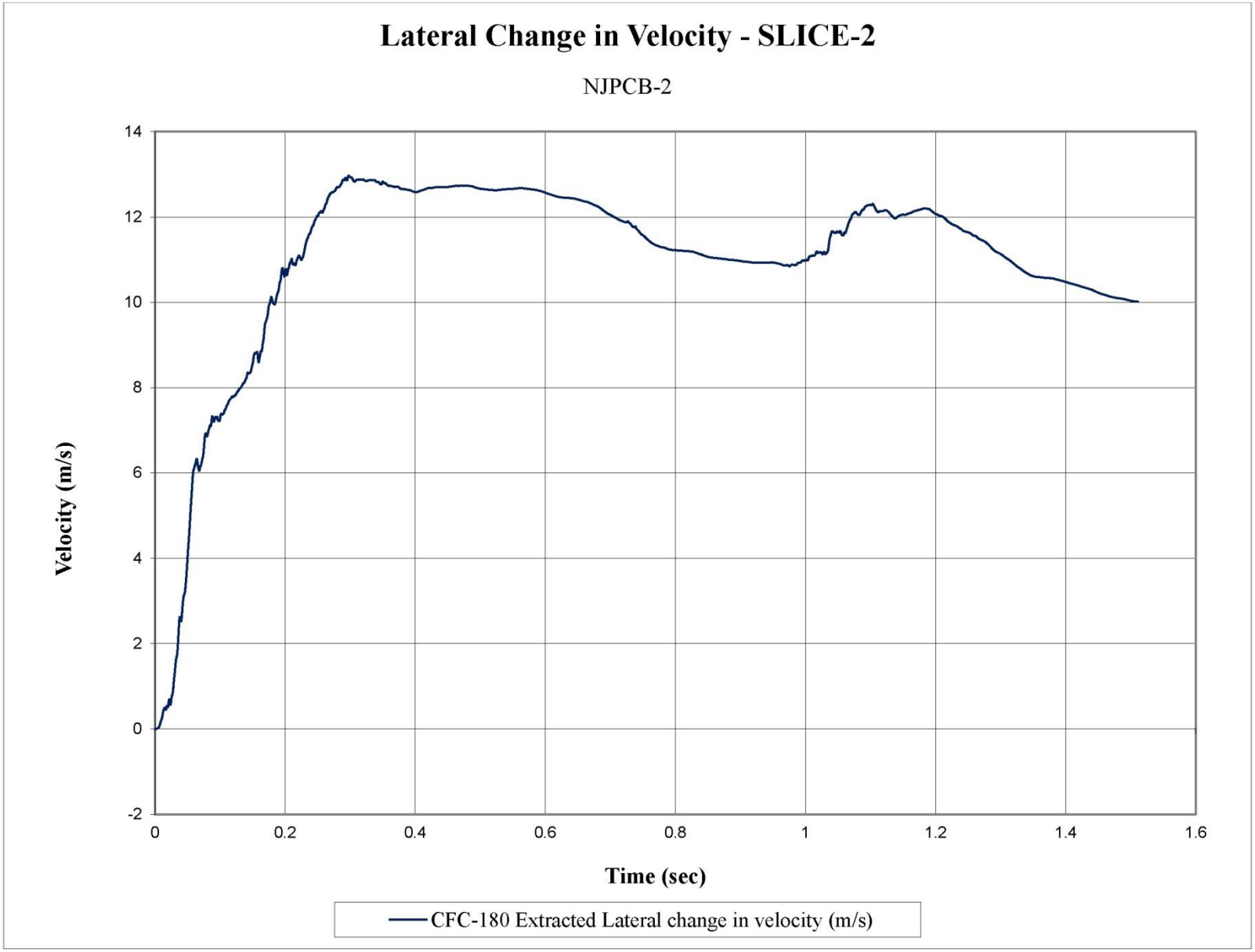

Figure G-13. Lateral Occupant Impact Velocity (SLICE-2), Test No. NJPCB-2

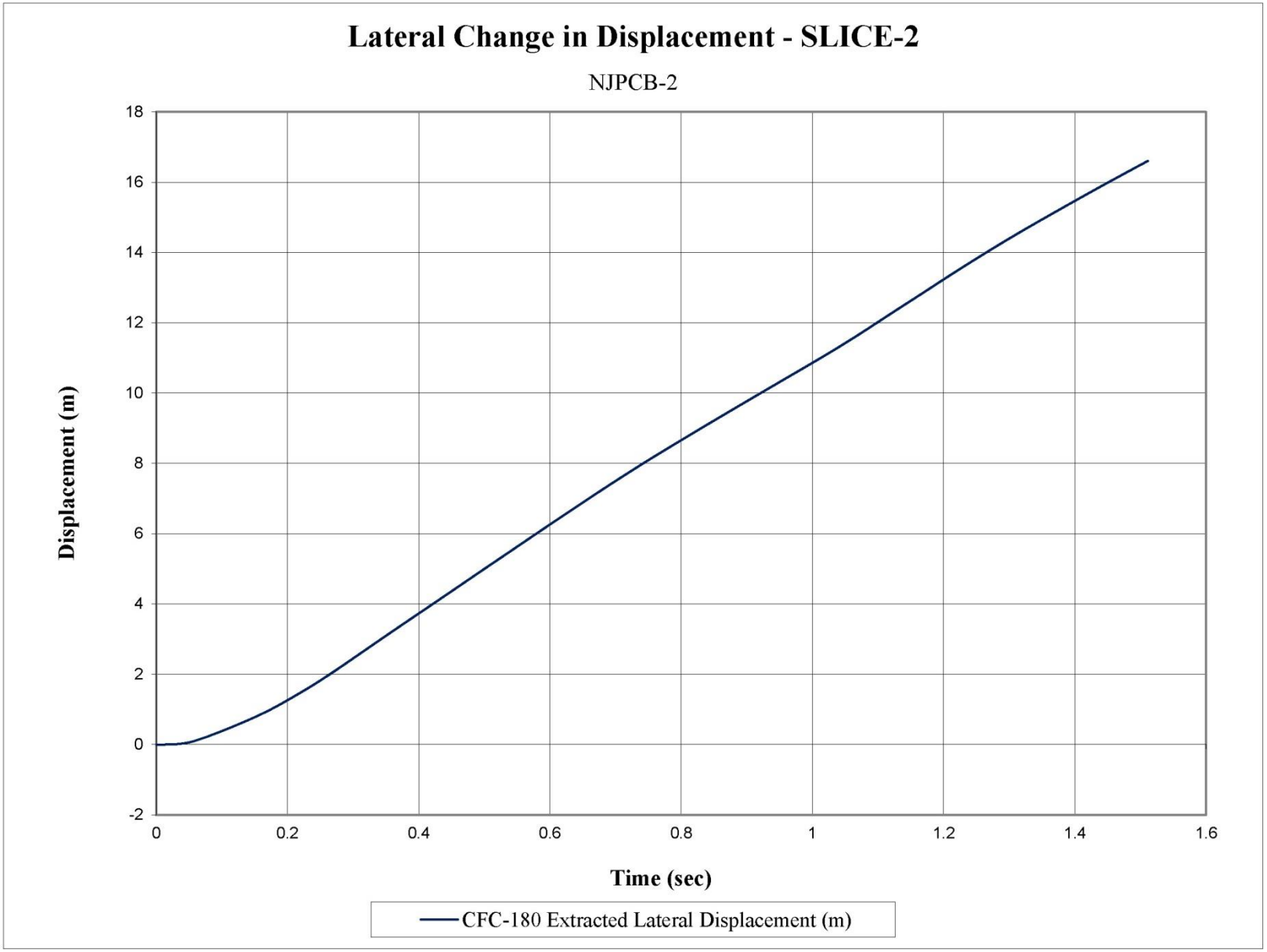

Figure G-14. Lateral Occupant Displacement (SLICE-2), Test No. NJPCB-2

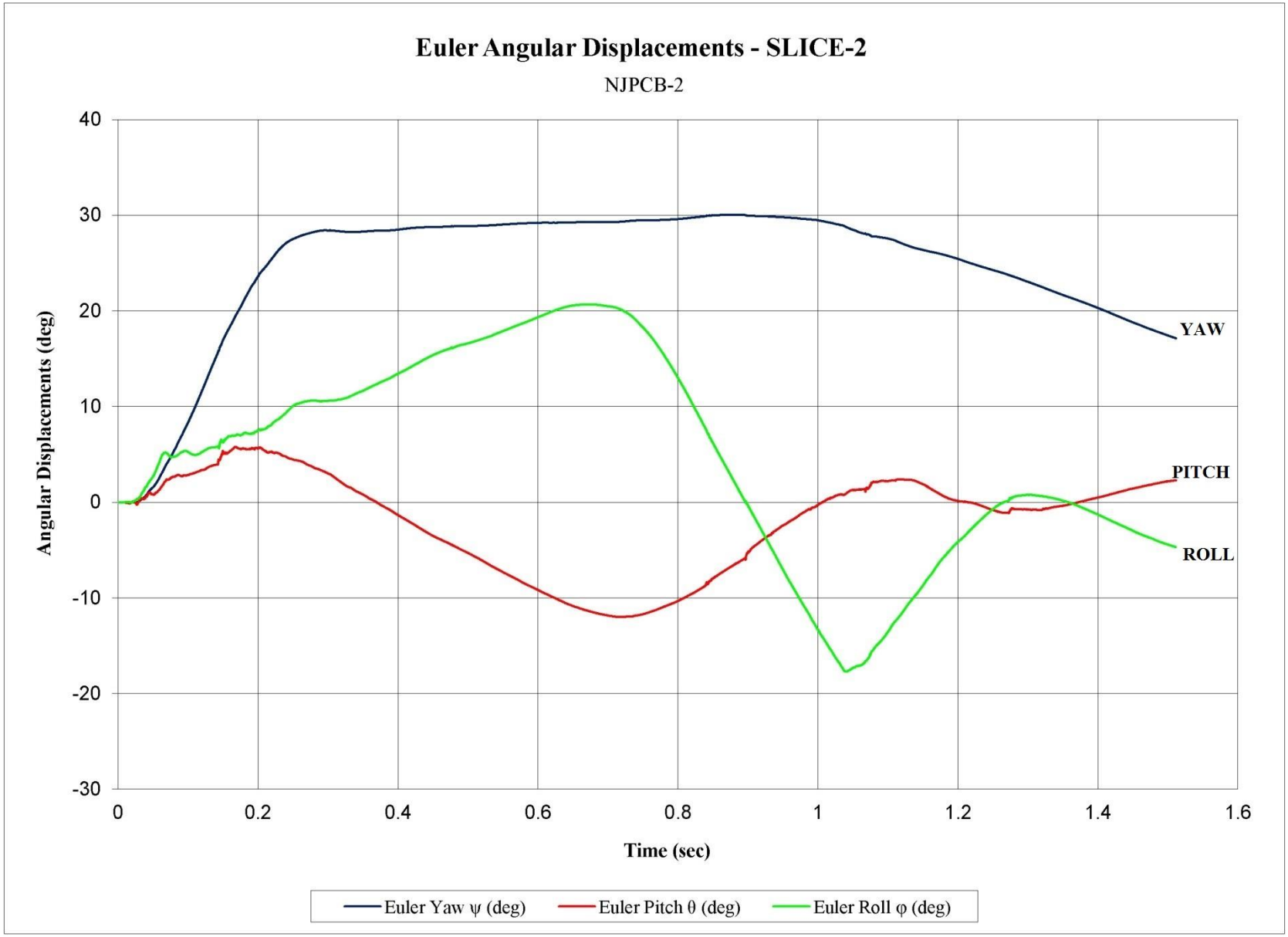

Figure G-15. Vehicle Angular Displacements (SLICE-2), Test No. NJPCB-2

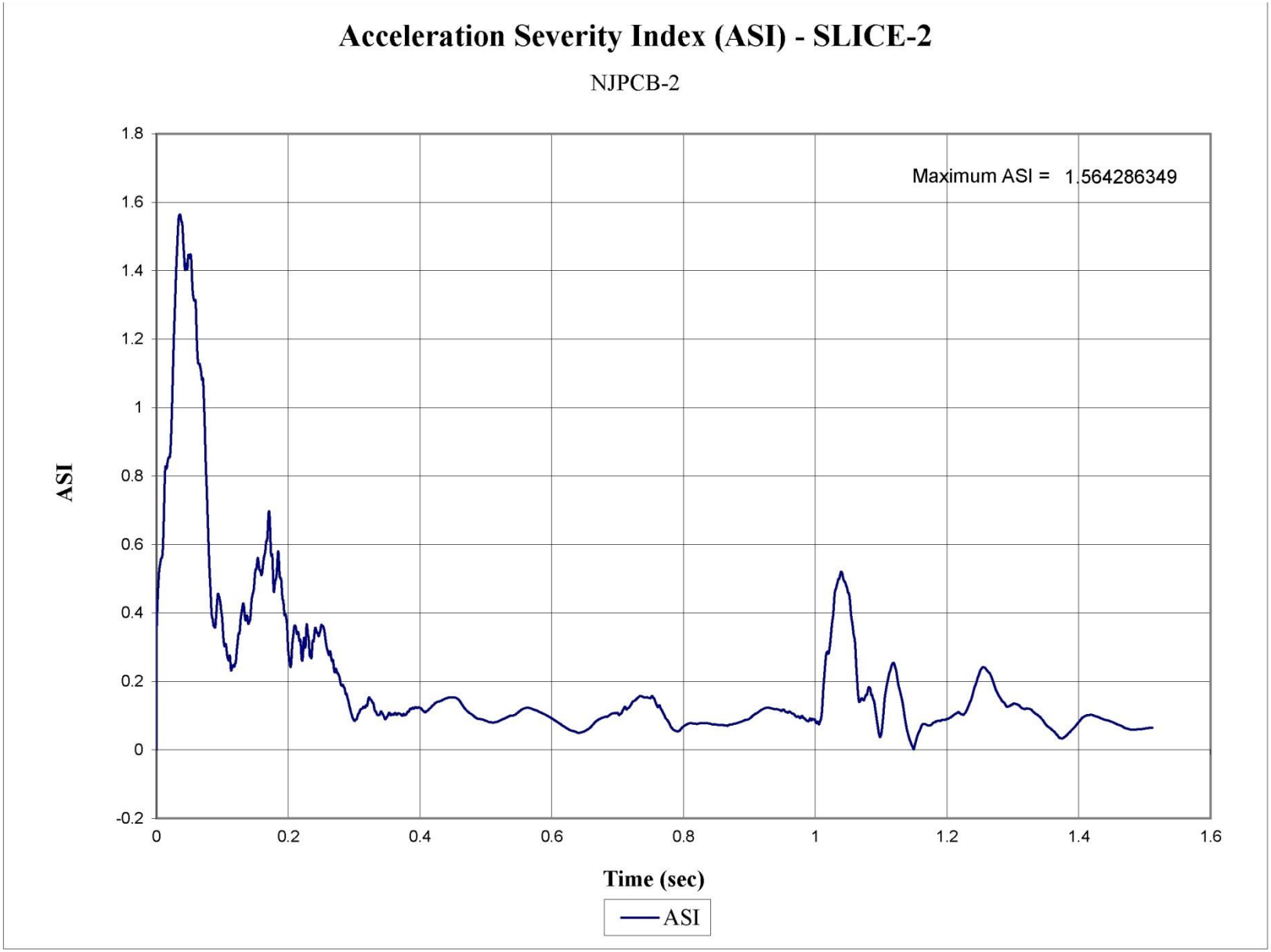

Figure G-16. Acceleration Severity Index (SLICE-2), Test No. NJPCB-2

END OF DOCUMENT