NOTES:
1. ALL EDGES SHALL BE ROUNDED WITH A 15/16 [24] R EXCEPT AS SHOWN.
2. THE BARRIER SHALL BE ANCHORED AT THE ENDS OR AT INTERRUPTIONS WITH EITHER A DOWELED-IN CONNECTION OR A 10 [255] DEEP MONOLITHIC FOOTING.

ELEVATION

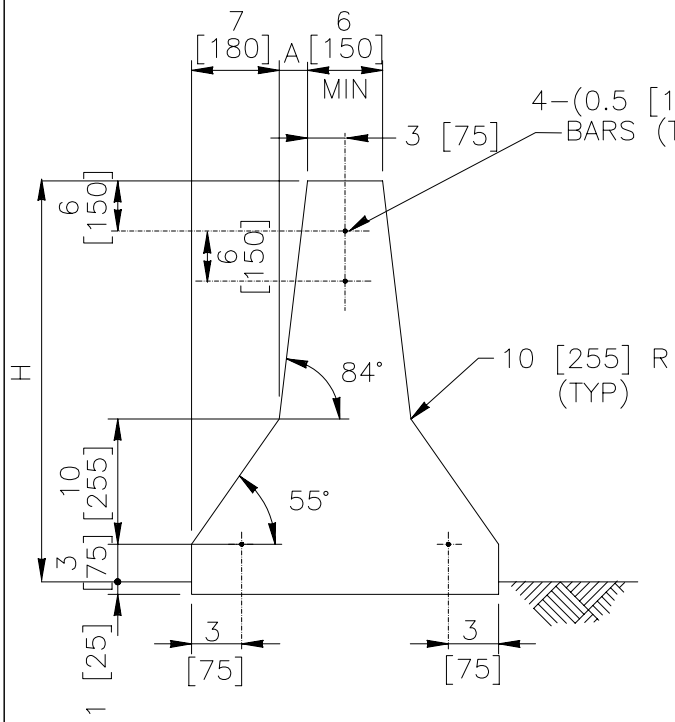

SECTION

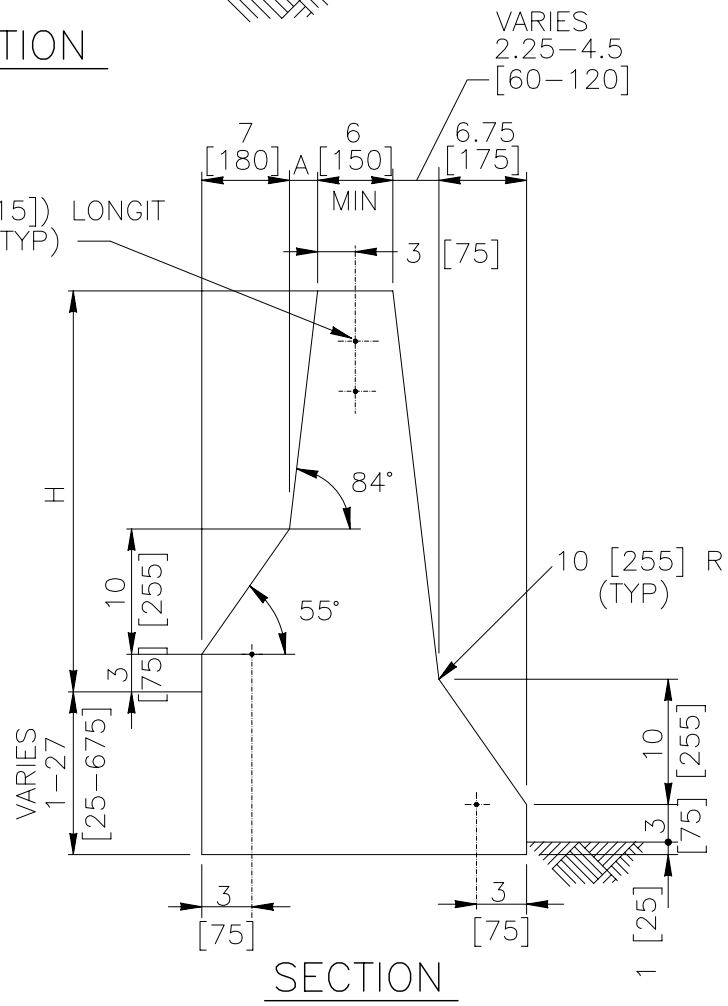

SECTION

SYSTEM	A	H
SGM11a	2 [50]	32 [810]
SGM11b	3-1/8 [80]	42 [1070]

1994

SAFETY-SHAPE MEDIAN BARRIER

SGM11a-b

SHEET NO.	DATE:
1 of 4	05/16/2005

INTENDED USE

The New Jersey shape median barrier is one of the most popular and versatile barrier systems in use in the United States. SGM-11a is a Test Level 4 barrier, and SGM-11b is a Test Level 5 barrier.

Four ½-in. [15 mm] reinforcement bars are shown, but other sizes, numbers and arrangements of reinforcement are commonly used with apparent success by the States. The upper longitudinal reinforcement does not provide flexural strength since they lie on the neutral axis. These bars are intended to prevent large pieces of the barrier breaking off and falling into the traveled way in a severe collision. Some states allow the use of 6x6 W2.9xW2.9 [150x150 W18xW18] welded wire fabric in place of the longitudinal bars. Additional flexural reinforcement will increase the strength of the barrier in severe collisions. A 10-ft [3-m] long, 10-inch [250-mm] deep reinforced anchor footing should be provided at both ends to properly secure the barrier. Other common methods of supporting this barrier include setting the barrier in a continuous keyed foundation or dowelling the barrier to a foundation. Many States use a top-width of 8 in. [200 mm] to accommodate barrier-mounted signs and luminaires. This barrier may be cast-in-place, slip-formed, or pre-cast. Open joints should be provided at least every 200 ft [60 m], although 20 ft [6 m] is more common.

COMPONENTS

Concrete shall develop a minimum 28-day strength of 4500 psi [30 MPa] as specified in AASHTO M 85 (ASTM C 150) for Type II concrete. Reinforcing steel shall be Grade 60 [400] and shall conform to either of the following:

(a) Epoxy-coated deformed bars as specified in AASHTO M 284/M 284M (ASTM D 3963).
(b) AASHTO M 31 (ASTM A 615) [AASHTO M 31M (ASTM A 615M)] deformed and plain billet steel reinforcing bars for use with calcium nitrite corrosion inhibitor (30% calcium nitrite solution).

APPROVALS

FHWA Acceptance Letter B-64, 2/14/00

REFERENCES

M.E. Bronstad, L.R. Calcote, C.E. Kimball, Jr., *Concrete Median Barrier Research*, Federal Highway Administration, FHWA-RD-77-4, Washington, DC, March 1976.

C.E. Buth, W.L. Campise, L.I. Griffin, M.L. Love, and D.L. Sicking, *Performance Limits of Longitudinal Barriers*, Federal Highway Administration, FHWA-RD-86-153 (vol. 1), Washington, DC, May 1986.

NOTES:

1. THE TOTAL LENGTH OF THE BARRIER SHALL BE LESS THAN 2400 [60000]. A LENGTH OF 240 [6000] IS THE MOST COMMON.
2. BARRIER MAY BE MONOLITHIC WITH FOOTING OR IT MAY BE CONNECTED WITH 10 (1 [25]) REBAR DOWELS SET 2 IN LINE AT 24 [610].
3. USE MINIMUM COVER OF 1.5 [40].

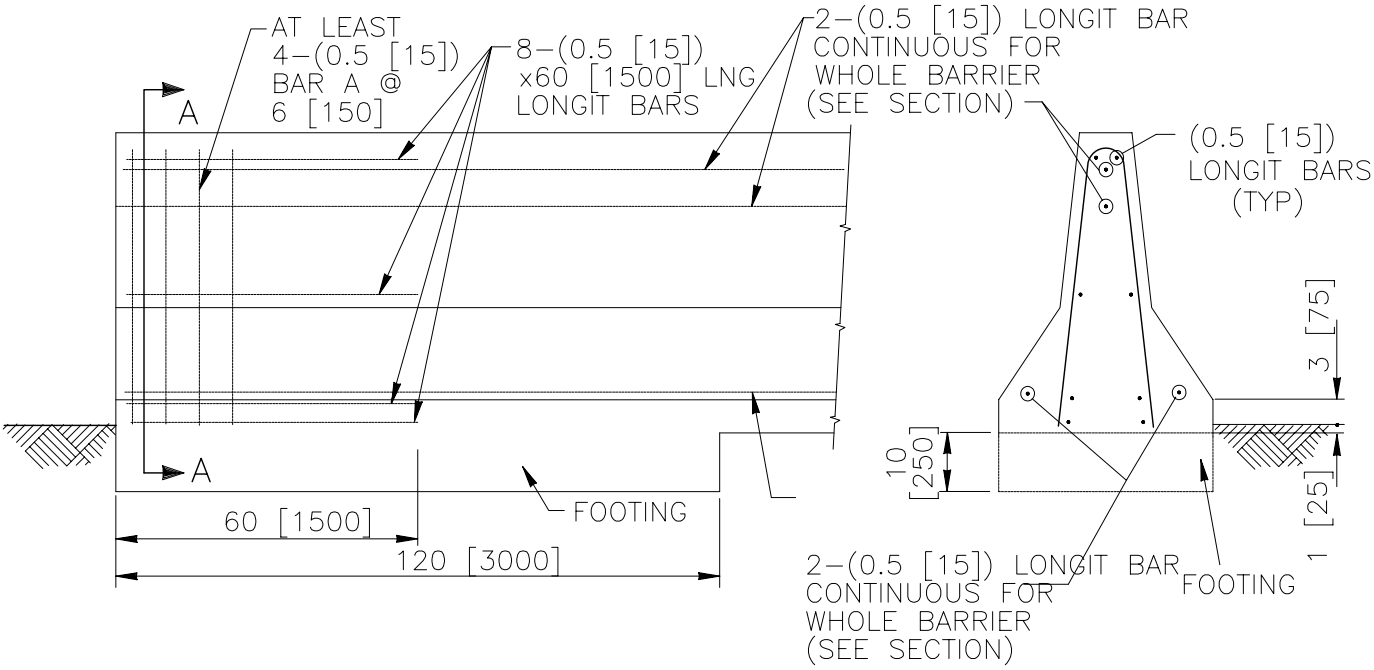

ANCHORAGE DETAIL

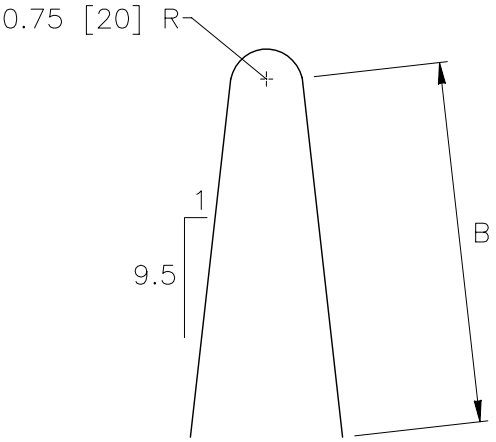

SYSTEM	B
SGM11a	38 [970]
SGM11b	49 [1250]

BAR A (0.5 [15])

1994

SAFETY-SHAPE MEDIAN BARRIER

SGM11a-b

SHEET NO.	DATE:
3 of 4	7/12/2005

CONTACT INFORMATION

Federal Highway Administration
Office of Safety
400 Seventh Street SW
Washington, DC 20590
202-366-2288

SAFETY-SHAPE MEDIAN BARRIER

SGM11a-b	
SHEET NO.	DATE
4 of 4	05/16/2005