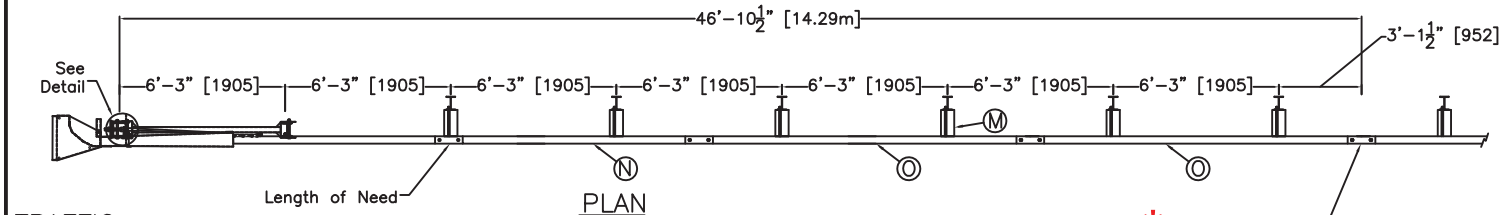

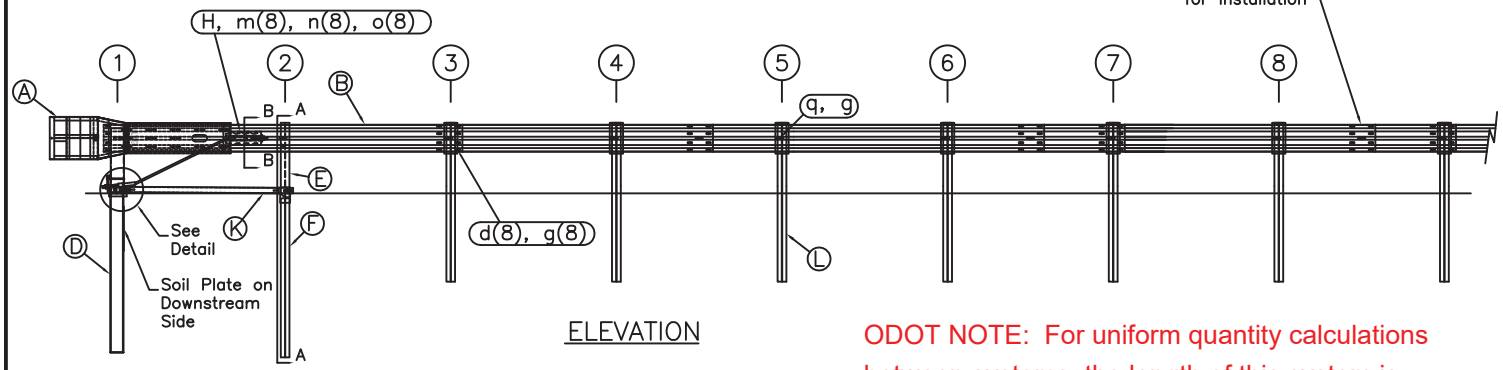

ELEVATION

ODOT NOTE: For uniform quantity calculations between systems, the length of this system is considered to be 53' - 1 1/2" measured from post 1 to the splice between posts 9 and 10.

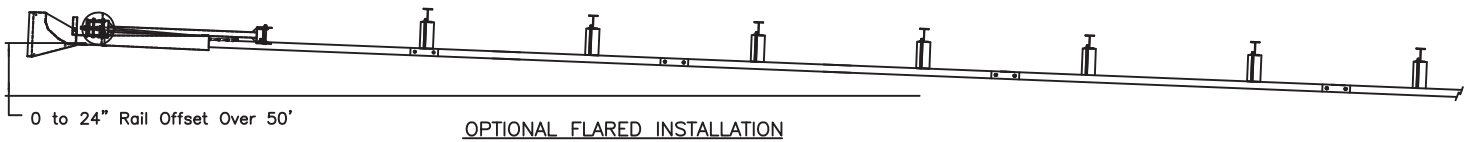

OPTIONAL FLARED INSTALLATION
25:1 maximum flare rate

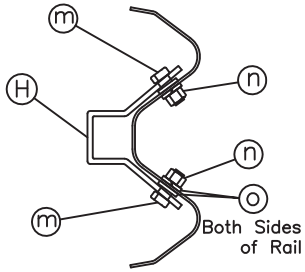

SECTION B–B
Anchor Bracket

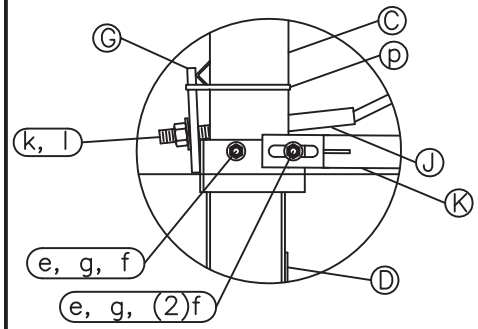

Post #1 Connection Detail

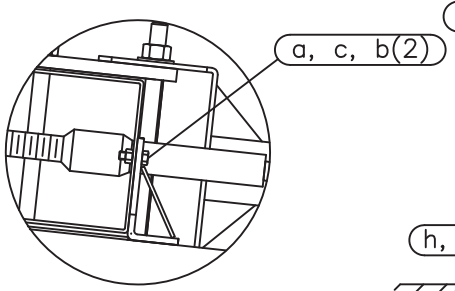

Impact Head Connection Detail

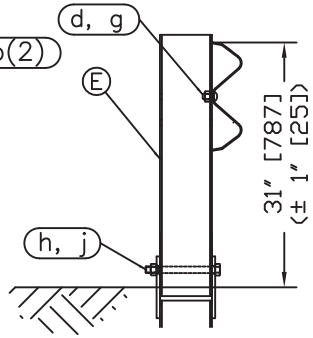

SECTION A–A
Post #2

ITEM	QTY	BILL OF MATERIALS	ITEM NO.
A	1	IMPACT HEAD	MS3000
B	1	W-BEAM GUARDRAIL END SECTION, 12 Ga.	SF1303
C	1	FIRST POST TOP (6X6X⅛" Tube)	MTPHP1A
D	1	FIRST POST BOTTOM (6' W6X15)	MTPHP1B
E	1	SECOND POST ASSEMBLY TOP	UHP2A
F	1	SECOND POST ASSEMBLY BOTTOM	HP2B
G	1	BEARING PLATE	E750
H	1	CABLE ANCHOR BOX	S760
J	1	BCT CABLE ANCHOR ASSEMBLY	E770
K	1	STRUT	MS785
L	6	6x9 (6x8.5) STEEL POST	P621
M	6	RECYCLED PLASTIC BLOCK OR EQUIV.	P618
N	1	W-BEAM MGS RAIL SECTION (9'-4 1/2")	G12025
O	2	W-BEAM MGS RAIL SECTION (12'-6")	G1203A
HARDWARE (ALL DIMENSIONS IN INCHES)			
a	2	5/16 x 1 HEX BOLT GRD 5	B5160104A
b	4	5/16 WASHER	W0516
c	2	5/16 HEX NUT	N0516
d	25	5/8 Dia. x 1 1/4 SPLICE BOLT (POST #2)	B580122
e	2	5/8 Dia. x 9 HEX BOLT A449	B580904A
f	3	5/8 WASHER	W050
g	33	5/8 Dia. H.G.R NUT	N050
h	1	3/4 Dia. x 8 1/2 HEX BOLT GRD A449	B340854A
j	1	3/4 Dia. HEX NUT	N030
k	2	1 ANCHOR CABLE HEX NUT	N100
l	2	1 ANCHOR CABLE WASHER	W100
m	8	1/2 RSI SHOULDER BOLT W/WASHER	SB12A
n	8	1/2 STRUCTURAL NUT	N012A
o	8	1/2 STRUCTURAL WASHER	W012A
p	1	BEARING PLATE RETAINER TIE	CT-100ST
q	6	5/8" x 14" H.G.R. BOLT	B581402

GENERAL NOTES:
1. All bolts, nuts, cable assemblies, cable anchors and bearing plates shall be galvanized.
2. The lower sections of the Posts 1&2 shall not protrude more than 4 in [100] above the ground (measured along a 5' [1.5m] cord longitudinal to the system). Site grading may be necessary to meet this requirement.
3. The lower section of the hinged post should not be driven with the upper post attached. If the post is placed in a drilled hole, the backfill material must be satisfactorily compacted to prevent settlement.
4. When competent rock is encountered, a 12" [300] Ø post hole, 20 in. [500] deep cored into the rock surface may be used if approved by the engineer for Posts 1 and/or 2. Granular material will be placed in the bottom of the hole, approximately 2.5" [60] deep to provide drainage. The first and/or second post can be field cut to length, placed in the hole and backfilled with suitable backfill. The soil plate may be trimmed if required.
5. The breakaway cable assembly must be taut. A locking device (vice grips or channel lock pliers) should be used to prevent the cable from twisting when tightening nuts.

RSI Road Systems, Inc.
Big Spring, TX
Phone: 432-263-2435
or Phone: 330-346-0721

MSKT-SP-MGS
Terminal (12" Blocks)
Test Level 3

Sheet:	Date:	By:
1	05/20/17	JRR

Drawing Name:	Scale:	Rev:
MSKT-SP-MGS12	None	0