STATE	FEDERAL AID ROUTE	FEDERAL AID PROJECT	STATE ROUTE	STATE PROJECT	SHEET NO.
VA.	—		64	0064-M06-032	49

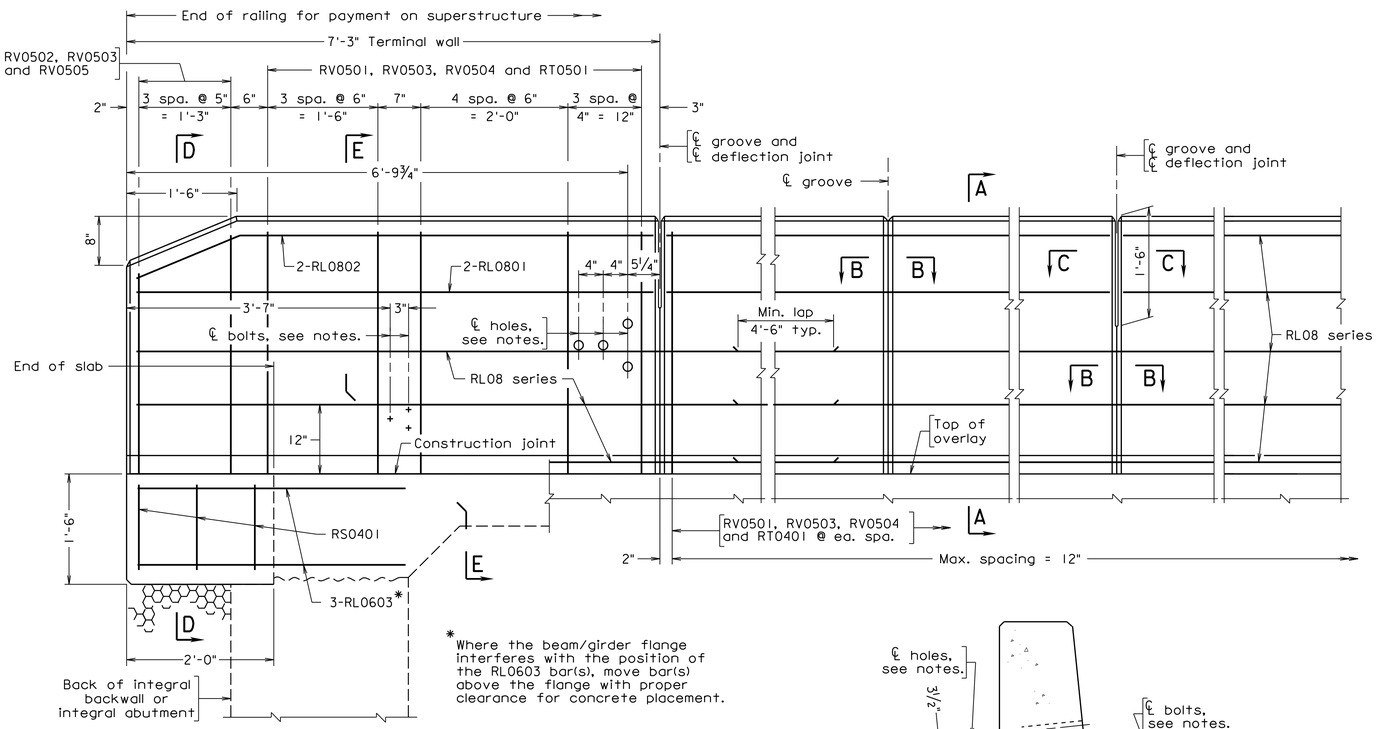

SEMI-INTEGRAL OR FULL INTEGRAL ABUTMENT

*Where the beam/girder flange interferes with the position of the RL0603 bar(s), move bar(s) above the flange with proper clearance for concrete placement.

ELEVATION

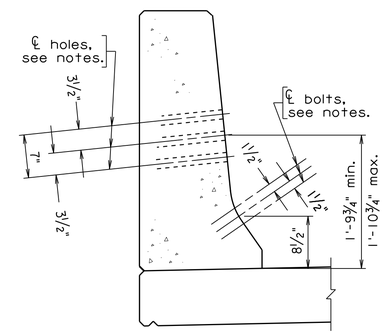

SECTION E-E
Reinforcing steel not shown.

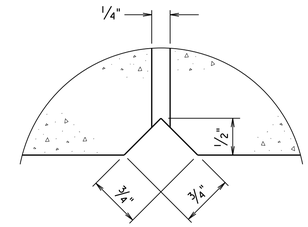

SECTION C-C
Full scale
Deflection joint detail for both sides of parapet

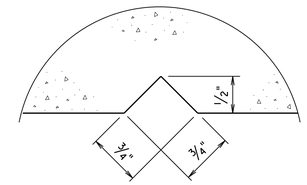

SECTION B-B
Full scale
Groove detail for both sides of parapet

Notes:

Plan dimensions shown are measured in the respective horizontal and vertical planes.

The Contractor shall determine all dimensions and details necessary for installation.

All concrete shall be Low Shrinkage Class A4 Modified.

All bevels for concrete shall be ¾".

The reinforcing steel shown has been detailed based on a standard ¼" per foot cross slope and for an 8½" slab depth. The Contractor shall adjust the reinforcing steel as required for other cross slopes and slab depths.

All reinforcing steel shall be plain steel.

Use groove and deflection joint over pier.

Spacing of grooves is to be approximately 8'-0". If lighting standard is used (see bridge conduit system), groove shall be located approximately 4'-0" from centerline of light standard. Spacing of deflection joints shall not exceed three groove spaces.

Barrier delineator size, color and spacing shall be in accordance with the Specifications.

Each terminal wall shall be cast as one piece.

Terminal walls are detailed to take guardrail attachment GR-FOA-2.

Holes, where shown, shall be formed with sleeves of 1½" diameter nominal pipe.

Bolts for guardrail attachment, where shown, shall be ⅝" diameter expansion anchor bolts, 6" long and shall be drilled and installed when rub rail is attached.

Bid item for parapet shall include bolts, sleeves, barrier delineators, grounding materials and other associated metal parts as shown on the plans. Also included are concrete noted in the plans and reinforcing steel indicated in the reinforcing steel schedule.

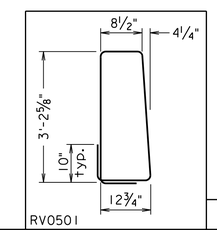

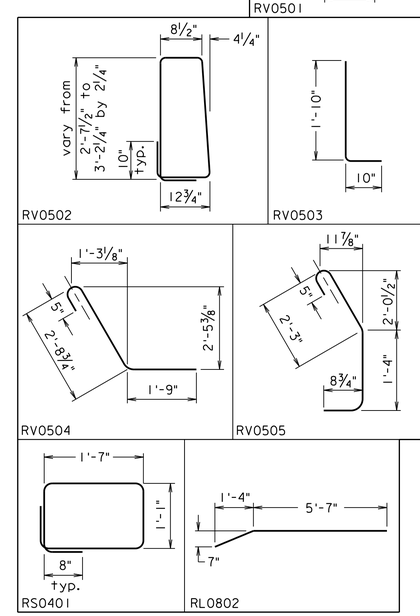

REINFORCING STEEL SCHEDULE

Mark	No.	Size	Pin ø	Length	Location
★RT0401		#4	—	3'-0"	Slab
RV0501		#5	3¾"	9'-3"	Parapet and teminal wall
RV0502		#5	3¾"	from 8'-1 to 9'-2'	Terminal wall (4 per terminal wall)
RV0503		#5	3¾"	2'-6½"	Parapet
RV0504		#5	3¾"	5'-0"	Parapet
RV0505		#5	—	4'-9"	Terminal wall and wingwall
RS0401		#4	3"	6'-2"	Terminal wall end support
RL0801		#8	—	6'-11"	Terminal wall and U-back wing
RL0802		#8	6"	7'-0¼"	Terminal wall
RL0603		#6	—	3'-6"	Terminal wall end support
RL08		#8	—		Parapet

Dimensions in bending diagram are out-to-out of bars, except as shown.

Cost of all bars listed in schedule to be included in price bid for parapet.

Gross concrete quantities (C.Y.) = Lin. Ft. x 0.158
All concrete above roadway slab.

★ Used only when deck transverse reinforcement is parallel to skew of bridge.

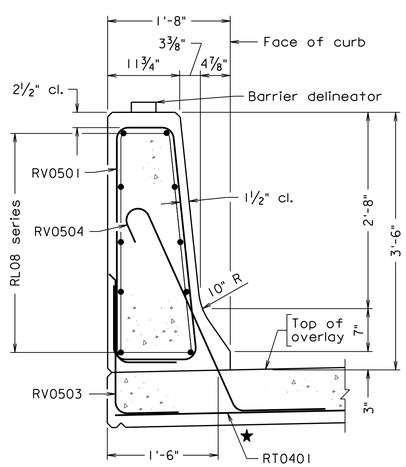

SECTION A-A
For details of RV bars in NEXT beams, see sheets 23 and 36.

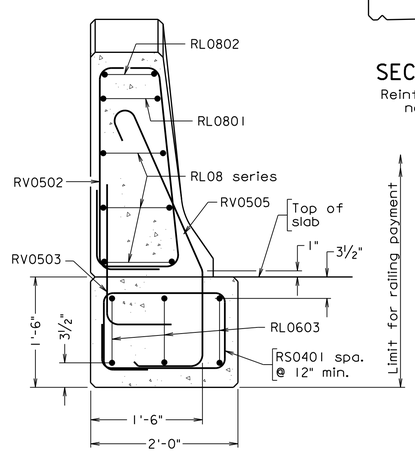

SECTION D-D
For dimensions and details not shown, see Section A-A.

Scale: 1" = 1'-0" unless otherwise shown.

COMMONWEALTH OF VIRGINIA
CHARLES GLEN McBROOM
Lic. No. 060748
PROFESSIONAL ENGINEER

Charles G McBroom
Digitally signed by Charles G McBroom
Date: 2021.01.28 16:18:44 -05'00'

HDR Engineering, Inc.
Virginia Beach, VA
STRUCTURAL ENGINEER

FINAL PLAN REVISIONS SUBMITTAL DATE:

NO.	DATE	AUTH.	DESCRIPTION	NO.	DATE	AUTH.	DESCRIPTION

HRBT EXPANSION | HAMPTON ROADS CONNECTOR PARTNERS | 64 HDR | MOTT MACDONALD | Design Joint Venture

Designed: CGM
Drawn: LNM
Checked: JRH

STRUCTURE AND BRIDGE DIVISION
DATE: February 5, 2021

SOUTH MOT TRESTLE (EB)
42" CAST-IN-PLACE
CONCRETE PARAPET (F-SHAPE)

Plan No. MOT-SE
Sheet No. 49 of 78

PenTable:ICS_Bridge_Full.pen
Plot Driver :ICS_Bridge_Full.set

MOT-ST_02_EB_049_R00.dgn

05-18-2016

BPB-4C

ProjectWise File Location: \\\omapi-pwics01\ICSforPDFWork\28999\1610008_38\MOT-ST_02_EB_049_R00.dgn
Plotted by: svc_in_pwservice
Date & Time: Wednesday, January 20, 2021 10:42:45 AM